Rimoldi® by CF®

QUALITY RECOGNIZED WORLDWIDE AT VERY COMPETITIVE PRICES

# C07-00-1CD-01
# C07-00-1CD-07
# C07-10-1CD-06

CATALOGO PEZZI DI RICAMBIO
SPARE PARTS CATALOGUE

## ISTRUZIONI PER LA CONSULTAZIONE DEL CATALOGO

Tutti i particolari delle teste sono rappresentati in più tavole come indicato nell'indice.
Quando i particolari rappresentati in una tavola **sono comuni a tutte le teste riportate nel catalogo**, sulla tavola e nell'indice **non sono indicati i simboli delle teste** poiché sono gli stessi riportati sulla copertina.
Eventuali varianti sono rappresentate in un riquadro sulla medesima tavola, con l'indicazione delle teste a cui si riferiscono.
Quando i particolari rappresentati in una tavola **non sono comuni a tutte le teste riportate nel catalogo**, la tavola viene ripetuta più volte con lo stesso numero seguito da una lettera.
**Sulla tavola e nell'indice** (di fianco alla descrizione della tavola) **sono indicate le teste interessate.** Eventuali varianti sono rappresentate in un riquadro sulla medesima tavola, con l'indicazione delle teste a cui si riferiscono.

1) tutti i particolari non fornibili sciolti non vengono richiamati singolarmente ma soltanto illustrati nel gruppo d'appartenenza.

2) I numeri riguardanti le figure dei particolari che compongono il gruppo sono di norma raggruppati in una parentesi. In alcuni casi però, dove non é possibile il raggruppamento, i numeri sono affiancati dallo stesso segno particolare (es. ★▲●■ ecc.) con cui é indicato l'intero gruppo.

I particolari a richiesta sono rappresentati nelle ultime tavole contrassegnate con la voce "A RICHIESTA"
Le teste su cui tali particolari possono essere montati sono indicate nelle descrizioni della tavola.
Per facilitare la ricerca viene riportato l'elenco di tutti i particolari illustrati sul Catalogo Base, con la relativa tavola in cui gli stessi sono richiamati.

AGHI
Gli aghi sono contraddistinti dal sistema e dalla finezza.
Il sistema dell'ago e la finezza sono marcati oltre che sulla busta, anche sull'ago stesso. Nelle ordinazioni precisare, oltre al simbolo, il sistema e la finezza degli aghi desiderati. In caso di dubbio allegare un ago campione o una bustina vuota.

IMPORTANTE

Nella richiesta di parti di ricambio citare sempre il relativo numero della testa, il numero della tavola e il simbolo del particolare con relativa descrizione usata sul catalogo.

## INSTRUCTIONS TO CONSULT THE CATALOGUE

All the spare parts are illustrated in several table as indicated in the index.
When the parts illustrated in one table **are common to all the heads listed in the catalogue, the symbols of the heads, have not been indicated** on the table and in the index because they are listed on the cover.
Eventual variations are illustrated is a square on the same table, with the indication of the heads to whom it refers.
When the parts illustrated in one table **are not common to all the heads listed in the catalogue**, the table is reproduced several times with the same reference number followed by a letter.
**The heads concerned have been indicated on the table and in the index** (by the side of the description of the table).
Eventual variations are illustrated in a square on the same table, with the indication of the heads to whom it refers.

1) all parts which cannot be supplied by themselves are not indicated alone, but shown together with the group to which they belong.

2) The references of the pictures of the parts making up the group are usually put in brackets. In some cases, however, when their grouping is not possible, the numbers of the various parts in the tables are marked with the same particular sign (for ex ★▲●■ etc. ) with which the whole group is indicated.

The parts on request are illustrated on the list tables with the indication " ON REQUEST".
The heads on which those parts can be fitted are indicated in the description of the table.

NEEDLES
The needles are marked with system and size.
The system and size of the needle are shown on the packet as well as on the needle itself. When ordering please state symbol, system and size. If you have doubts, enclose a sample needle or an empty packet with your order.

ATTENTION

When ordering spare parts always state the serial number of the machine, the symbol of the part in question and the description given in the catalogue.

## INSTRUCTIONS POUR LA CONSULTATION DU CATALOGUE

Toutes les pièces des têtes sont représentées en plusieurs tables comme nous avons indiqué dans l'index.
Quand les pièces représentées dans une table **sont communes à toutes les têtes mentionnées das le catalogue**, sur la table et dans l'index **ne sont pas indiqués les symboles des têtes** car ce sont les mêmes imprimés sur la couverture.
Les modifications eventuelles sont indiquées dans un panneau sur la table même avec l'indication des têtes auxquelles elles se réfèrrent.
Quand les pièces représentées dans une table **ne sont pas communes à toutes les têtes mentionnées dans le catalogue**, la table est publiée plusieurs fois avec les mêmes chiffres suivis d'une lettre.**Sur la table et dans l'index** (à côté de la description de la table ) **sont indiquées les têtes intéressées.** Les modification eventuelles sont indiquées dans un panneau sur la table même avec l'indication des têtes auxquelles elles se réfèrrent.

1) toutes les pièces qui ne sont pas fournies séparément mais qui font partie d'un groupe, ne sont pas indiquées séparément.

2) Les symboles des pièces qui forment un groupe son regroupés entre parenthèses. Cependant, lorsque ceci n'a pas été possible, les symboles, qui dans les tables d'illustration correspondent aux pièces, sont suivis du même signe particulier (ex.★▲●■ etc.) qui indique le groupe tout entier.

Les pièces sur demande sont représentées dans les dernières tables marquées avec la mention "SUR DEMANDE".
Pour faciliter la recherche, le catalogue renferme l'index numérique de toutes les pièces illustrées avec indication de la table dans laquelle elles son indiquées.

AIGUILLES
Les aiguilles se différencient par le système et la grosseur.
Le système de l'aiguille et sa grosseur, sont indiqués non seulement sur le sachet mais également sur l'aiguille.Dans l'ordre préciser, en plus du symbole, le système et la grosseur des aiguilles désirés. En cas de doute, joindre une aiguille comme modèle ou un sachet vide.

ATTENTION

En cas d'ordre de pièces détachées indiquer toujours le numéro de la machine, le symbole de la pièce et la dénomination officielle mentionnée sur le catalogue.

## SOMMARIO - SUMMARY - SOMMAIRE


| TAV.N. TAB.N. | DESCRIZIONE | DESCRIPTION | DESCRIPTION |
|---|---|---|---|
| 1 | SPORTELLO E CARTER ANTERIORE | COVER AND FRONT CARTER | COUVERCLE ET CARTER AVANT |
| 2 | COPERCHIO CON TENSIONI E PASSAFILI | COVER WITH TENSIONS AND THREADS GUIDE | COUVERCLE AVEC TENSIONS ET PASSE FILS |
| 3 | ALBERO PRINCIPALE | MAIN SHAFT | ARBRE PRINCIPAL |
| 4 | COMANDO GRIFFE CON ECCENTRICO | FEED DOGS CONTROL WITH ECCENTRIC | COMMANDE GRIFFES AVEC EXCENTRIQUE |
| 5 | PORTA CROCHET SUPERIORE E INFERIORE | UPPER - LOWER LOOPER HOLDER | PORTE CROCHET SUPERIEUR ET INFERIEUR |
| 6 | CINEMATISMO BARRA AGO | NEEDLE BAR CONTROL | CINEMATISME BARRE AIGUILLE |
| 7 | SUPPORTO E LEVA PREMISTOFFA | SUPPORT AND PRESSER LEVER | SUPPORT ET LEVIER PRESSE-TISSUE |
| 8 | PORTA COLTELLI | KNIVES HOLDER | PORTE COUTEAUX |
| 9 | LUBRIFICAZIONE | LUBRICATION | LUBRIFICATION |
| 10 | BACINELLA OLIO | OIL SUMP | RESERVOIR HUILE |
| 11 | ACCESSORI IN DOTAZIONE | AUXILIARY EQUIPMENT | ACCESSOIRES EN DOTATION |
| 12 | PIAZZAMENTO SU BANCALE | SETTING ON STAND | PLACEMENT SUR BATI |
| 13-14 | ORGANI DI CUCITURA | SEWING PARTS | ORGANES DE COUTURE |


CSMP

INDEX


| SIMB. | TAV. | SIMB. | TAV. | SIMB. | TAV. | SIMB. | TAV. | SIMB. | TAV. | SIMB. | TAV. | SIMB. | TAV. |
|---|---|---|---|---|---|---|---|---|---|---|---|---|---|
| 100620-2-10 | 4 | 202408-0-10 | 4 | 203715-0-10 | 14 | 206599-0-01 | 4 | 206734-2-00 | 1 | 207876-2-00 | 7 | 207980-0-00 | 1 |
| 200490-0-00 | 4 | 202412-0-11 | 4 | 203716-0-10 | 14 | 206602-0-00 | 4 | 206740-0-00 | 2 | 207878-3-00 | 7 | 207981-0-00 | 1 |
| 201128-0-10 | 5 | 202473-0-11 | 4 | 204122-0-10 | 3 | 206603-0-11 | 4 | 206747-0-01 | 2 | 207879-0-00 | 7 | 207983-0-00 | 1 |
| 201162-0-10 | 14 | 202475-0-10 | 4 | 204947-0-10 | 7 | 206605-0-01 | 4 | 206748-0-00 | 9 | 207880-0-00 | 7 | 207984-0-00 | 1 |
| 201236-0-10 | 14 | 202478-0-10 | 4 | 206296-0-00 | 9 | 206606-2-00 | 4-6 | 206754-0-00 | 2 | 207881-2-00 | 7 | 207985-0-00 | 1 |
| 201246-0-10 | 14 | 202480-0-10 | 9 | 206341-4-00 | 2 | 206613-0-00 | 4 | 206755-0-00 | 2 | 207882-2-00 | 7 | 207988-0-00 | 1 |
| 201254-2-10 | 14 | 202484-0-10 | 9 | 206342-4-00 | 2 | 206615-4-00 | 4 | 206756-0-01 | 1 | 207887-4-00 | 7 | 207990-0-00 | 6 |
| 201358-0-10 | 4 | 202488-0-10 | 4 | 206452-4-00 | 5 | 206617-0-01 | 4 | 206757-0-00 | 8 | 207893-0-00 | 2 | 207991-0-00 | 6 |
| 201610-0-01 | 4 | 202489-0-10 | 4 | 206453-4-00 | 5 | 206618-0-10 | 4 | 206758-0-00 | 8 | 207901-0-01 | 10 | 207992-0-61 | 6 |
| 202026-0-10 | 9 | 202490-0-10 | 4 | 206507-0-00 | 3 | 206619-0-00 | 9 | 206764-0-00 | 1 | 207909-0-00 | 10 | 207995-0-60 | 6 |
| 202027-0-10 | 9 | 202492-0-10 | 3 | 206508-0-00 | 3 | 206620-0-00 | 7 | 206767-0-00 | 1 | 207910-0-00 | 2 | 207998-2-00 | 6 |
| 202032-0-11 | 4 | 202504-0-61 | 13 | 206521-0-00 | 6 | 206621-0-00 | 7 | 206768-0-00 | 1 | 207917-0-00 | 9 | 207999-0-00 | 6 |
| 202033-0-10 | 4 | 202529-0-10 | 6-7 | 206533-0-00 | 6 | 206622-0-00 | 7 | 206769-0-10 | 1 | 207919-0-00 | 2 | 208011-0-61 | 14 |
| 202053-0-60 | 13 | 202556-0-01 | 2 | 206538-0-10 | 6 | 206635-0-00 | 7 | 206790-2-11 | 4 | 207927-0-01 | 6 | 208015-0-00 | 5 |
| 202057-0-60 | 13 | 202558-2-01 | 2 | 206539-0-01 | 8 | 206637-0-00 | 7 | 206796-0-00 | 4 | 207930-0-10 | 6 | 208022-2-00 | 1 |
| 202061-0-60 | 13 | 202720-0-00 | 5 | 206540-2-10 | 6 | 206642-0-00 | 7 | 206797-0-00 | 4 | 207932-0-10 | 6 | 208039-4-00 | 5 |
| 202062-2-10 | 5 | 202780-0-60 | 13 | 206543-0-01 | 3 | 206645-4-02 | 5 | 206798-0-00 | 4 | 207942-3-00 | 4 | 208060-4-00 | 1 |
| 202063-0-10 | 4 | 202782-0-60 | 13 | 206544-0-00 | 3 | 206650-0-00 | 2 | 208808-0-01 | 7 | 207943-2-00 | 4 | 208080-2-00 | 1 |
| 202065-0-20 | 5 | 202783-0-61 | 13 | 206545-0-00 | 10 | 206651-0-00 | 5 | 206810-2-00 | 7 | 207944-0-00 | 4 | 208087-3-00 | 9 |
| 202086-0-12 | 5 | 202786-0-61 | 13 | 206546-0-00 | 4 | 206652-2-01 | 5 | 206812-0-00 | 2 | 207945-0-00 | 4 | 208090-0-01 | 2 |
| 202092-0-61 | 14 | 202789-0-11 | 13 | 206554-0-02 | 9 | 206654-2-10 | 5 | 206872-0-00 | 4 | 207946-0-01 | 4 | 208091-0-01 | 2 |
| 202094-0-62 | 14 | 202795-0-10 | 13 | 206555-0-02 | 9 | 206658-2-02 | 5 | 206974-0-00 | 3 | 207947-0-00 | 4 | 208133-2-00 | 7 |
| 202095-0-62 | 14 | 202797-0-11 | 13 | 206556-0-01 | 3 | 206659-2-02 | 5 | 207095-2-00 | 5 | 207948-0-00 | 4 | 208163-4-11 | 6 |
| 202128-0-10 | 8 | 202800-0-11 | 13 | 206557-0-00 | 9 | 206662-0-00 | 10 | 207096-2-00 | 5 | 207950-4-00 | 4 | 208164-0-00 | 6 |
| 202129-0-10 | 8 | 202805-0-10 | 14 | 206558-0-01 | 10 | 206665-2-00 | 10 | 207111-0-00 | 8 | 207951-4-00 | 9 | 208165-0-00 | 1 |
| 202130-0-11 | 8 | 202839-0-11 | 14 | 206559-0-01 | 10 | 206667-0-01 | 9 | 207421-0-01 | 8 | 207952-2-00 | 9 | 208184-2-00 | 2 |
| 202134-0-11 | 8 | 202840-4-11 | 14 | 206560-0-10 | 10 | 206679-0-00 | 3 | 207510-4-00 | 6 | 207953-0-00 | 9 | 208220-0-00 | 6 |
| 202142-0-60 | 13 | 202843-0-11 | 14 | 206564-0-00 | 10 | 206680-0-01 | 3 | 207520-2-00 | 6 | 207954-0-00 | 9 | 208221-0-00 | 6 |
| 202146-0-60 | 13 | 202847-0-10 | 14 | 206565-0-01 | 10 | 206682-0-01 | 3 | 207540-0-00 | 6 | 207955-2-01 | 1 | 208222-0-00 | 6 |
| 202171-3-62 | 13 | 202871-0-10 | 14 | 206566-0-00 | 10 | 206683-0-00 | 3 | 207574-0-00 | 6 | 207958-0-01 | 1 | 208224-0-00 | 6 |
| 202184-0-11 | 13 | 202974-0-10 | 14 | 206567-0-01 | 10 | 206684-0-10 | 3 | 207588-0-01 | 8 | 207959-0-00 | 7 | 208520-2-10 | 6 |
| 202192-0-10 | 13 | 203135-2-10 | 2 | 206568-0-01 | 10 | 206685-0-00 | 1 | 207589-0-00 | 8 | 207960-0-00 | 7 | 208521-2-00 | 8 |
| 202195-0-11 | 13 | 203142-0-10 | 7 | 206569-0-01 | 10 | 206686-0-00 | 5 | 207625-0-00 | 7 | 207961-0-00 | 9 | 209270-2-01 | 5 |
| 202201-0-11 | 13 | 203199-0-60 | 13 | 206574-2-01 | 8 | 206687-2-00 | 9 | 207626-0-00 | 7 | 207962-0-00 | 7 | 209272-0-00 | 5 |
| 202214-0-11 | 1-7 | 203214-0-61 | 13 | 206580-2-00 | 4 | 206688-0-00 | 9 | 207668-0-00 | 2 | 207965-0-00 | 7 | 209767-0-00 | 2 |
| 202227-0-10 | 2 | 203704-0-10 | 14 | 206583-0-00 | 4 | 206689-0-01 | 3 | 207669-0-00 | 2 | 207967-0-01 | 7 | 211612-0-01 | 4 |
| 202228-0-10 | 2 | 203705-0-10 | 14 | 206584-2-00 | 4 | 206690-2-00 | 9 | 207692-2-00 | 6 | 207968-0-01 | 2 | 300218-0-10 | 2 |
| 202229-0-10 | 2 | 203706-0-10 | 14 | 206586-0-01 | 4 | 206692-0-00 | 3 | 207711-2-10 | 4 | 207970-2-01 | 9 | 301586-0-10 | 7-9 |
| 202267-2-13 | 2 | 203707-0-10 | 14 | 206587-0-01 | 4 | 206693-0-00 | 3 | 207719-0-00 | 4 | 207971-0-00 | 9 | 301608-0-00 | 6 |
| 202279-0-10 | 2 | 203708-4-11 | 14 | 206588-0-00 | 4 | 206695-0-00 | 5 | 207724-2-00 | 4 | 207972-4-01 | 9 | 307137-0-00 | 1 |
| 202371-0-10 | 7 | 203709-0-11 | 14 | 206592-3-00 | 4 | 206697-4-01 | 3 | 207758-0-01 | 9 | 207973-0-01 | 9 | 309560-0-00 | 6 |
| 202385-0-10 | 4 | 203710-0-11 | 14 | 206593-0-00 | 4 | 206699-0-02 | 3 | 207856-0-00 | 1 | 207975-0-00 | 10 | 310167-0-00 | 6 |
| 202386-0-10 | 3 | 203711-4-11 | 14 | 206594-0-00 | 4 | 206708-0-00 | 3 | 207858-0-00 | 1 | 207977-0-00 | 9 | 700205-0-00 | 12 |
| 202391-0-11 | 7 | 203713-0-10 | 14 | 206595-0-01 | 4 | 206711-0-00 | 2 | 207861-4-00 | 8 | 207978-0-00 | 9 | 700207-0-00 | 4 |
| 202398-0-10 | 9 | 203714-0-10 | 14 | 206598-3-00 | 4 | 206733-0-01 | 4 | 207872-0-00 | 2 | 207979-0-00 | 9 | 700630-0-00 | 3 |

| SIMB. | TAV. | SIMB. | TAV. | SIMB. | TAV. | SIMB. | TAV. | SIMB. | TAV. | SIMB. | TAV. | SIMB. | TAV. |
|---|---|---|---|---|---|---|---|---|---|---|---|---|---|
| 701002-0-00 | 9 | 721475-2-00 | 4 | 741963-0-00 | 1 | 778835-0-00 | 8 | | | | | | |
| 701004-0-00 | 4-9 | 721484-2-00 | 2-10 | 742086-2-00 | 9 | 778837-0-00 | 6 | | | | | | |
| 701005-0-00 | 10 | 721494-2-00 | 9 | 742457-2-00 | 8 | 788001-0-01 | 2 | | | | | | |
| 701007-0-00 | 4 | 721883-0-00 | 5 | 742758-0-00 | 8 | 900201-0-10 | 12 | | | | | | |
| 701031-0-00 | 9 | 722063-2-00 | 1-3-4-7-9-10 | 742838-2-00 | 6 | 900203-0-10 | 12 | | | | | | |
| 701051-0-00 | 10 | 722089-2-00 | 5 | 743469-2-00 | 6-8 | 900204-0-10 | 12 | | | | | | |
| 701106-0-00 | 9 | 722123-2-00 | 7 | 744332-2-00 | 4-7 | 900694-0-11 | 12 | | | | | | |
| 701113-0-00 | 5 | 722471-2-00 | 8 | 744334-2-00 | 4-6-8 | 901101-0-00 | 12 | | | | | | |
| 701116-0-00 | 3 | 722480-2-00 | 6 | 744512-4-00 | 4-14 | 901102-0-00 | 12 | | | | | | |
| 701133-0-00 | 3 | 722511-2-00 | 9 | 744533-0-00 | 8 | 926273-0-00 | 7 | | | | | | |
| 701151-0-00 | 9 | 722905-2-00 | 12 | 744631-2-00 | 2 | 990176-0-10 | 11 | | | | | | |
| 702408-0-00 | 14 | 724032-0-00 | 4 | 744730-2-00 | 9 | 990179-4-11 | 12 | | | | | | |
| 702415-0-00 | 1 | 724460-0-00 | 6 | 744742-2-00 | 13 | 990310-0-10 | 12 | | | | | | |
| 703405-0-00 | 4 | 724895-2-00 | 4 | 745002-0-00 | 2-5-6 | 990311-0-10 | 12 | | | | | | |
| 704213-2-00 | 6-8 | 727014-2-00 | 6 | 745114-0-00 | 6-7 | 990314-0-10 | 12 | | | | | | |
| 704314-2-00 | 4 | 727021-0-00 | 6 | 745168-0-00 | 5 | 990316-0-11 | 12 | | | | | | |
| 704345-2-00 | 10-12 | 727096-0-00 | 7 | 745800-2-00 | 1-2-5 | 990325-0-10 | 11 | | | | | | |
| 704346-2-00 | 12 | 727884-0-00 | 4 | 745810-2-00 | 5-6 | 990335-0-10 | 10 | | | | | | |
| 704406-0-00 | 8 | 729012-2-00 | 6 | 745812-2-00 | 4-5-6-7 | 990452-0-00 | 12 | | | | | | |
| 704409-2-00 | 4-8 | 729013-2-00 | 14 | 745815-2-00 | 4 | 990474-0-11 | 11 | | | | | | |
| 704424-2-00 | 12 | 729022-2-00 | 1-9 | 746007-2-00 | 1-7-9 | 990639-0-10 | 11 | | | | | | |
| 704428-2-00 | 1 | 729032-2-00 | 4 | 746008-0-00 | 4 | 990685-0-10 | 11 | | | | | | |
| 704630-0-00 | 6 | 729034-2-00 | 6 | 746020-2-00 | 7 | 990694-0-01 | 7 | | | | | | |
| 704808-0-00 | 4 | 729051-2-00 | 4-6-7 | 746208-2-00 | 1 | 990723-0-00 | 11 | | | | | | |
| 704813-0-00 | 9 | 730011-2-00 | 4 | 746402-2-00 | 12 | 990918-0-00 | 11 | | | | | | |
| 704829-0-00 | 4 | 730023-2-00 | 1 | 746409-2-00 | 12 | 990981-0-00 | 12 | | | | | | |
| 704841-0-00 | 4 | 733008-2-00 | 10-12 | 765200-6-80 | 6 | 990982-0-00 | 12 | | | | | | |
| 704845-0-00 | 5 | 733503-0-00 | 2 | 778202-0-00 | 5 | 990984-4-10 | 12 | | | | | | |
| 704848-0-00 | 5 | 733505-2-00 | 7 | 778204-0-00 | 6-7 | 990987-4-00 | 12 | | | | | | |
| 705008-0-00 | 4 | 733507-2-00 | 9 | 778206-0-00 | 6 | 991187-0-00 | 12 | | | | | | |
| 705030-0-00 | 6-8 | 740053-2-00 | 4 | 778208-0-00 | 6 | 991218-0-00 | 10 | | | | | | |
| 705208-0-00 | 4 | 741405-0-00 | 6 | 778236-0-00 | 5 | 991280-0-10 | 11 | | | | | | |
| 705230-0-00 | 4 | 741413-2-00 | 4-13 | 778241-0-00 | 9 | 991400-4-02 | 11 | | | | | | |
| 705408-0-00 | 4 | 741415-2-00 | 5-6 | 778401-0-00 | 5 | 991415-0-00 | 11 | | | | | | |
| 705970-0-00 | 9 | 741431-2-00 | 13 | 778403-0-00 | 5 | | | | | | | | |
| 705975-0-00 | 9 | 741453-0-00 | 7 | 778405-0-00 | 5 | | | | | | | | |
| 705977-0-00 | 10 | 741535-0-00 | 9 | 778410-0-00 | 5 | | | | | | | | |
| 705982-0-00 | 9 | 741546-2-00 | 4 | 778414-0-00 | 6 | | | | | | | | |
| 720411-2-00 | 10 | 741552-0-00 | 6 | 778417-0-00 | 4-6 | | | | | | | | |
| 720431-2-00 | 2 | 741558-0-00 | 2 | 778419-0-00 | 6 | | | | | | | | |
| 721412-2-00 | 1-14 | 741657-0-00 | 2 | 778503-0-00 | 6 | | | | | | | | |
| 721434-2-00 | 7 | 741658-2-00 | 1 | 778511-0-00 | 6 | | | | | | | | |
| 721435-2-00 | 1 | 741665-2-00 | 13 | 778522-0-00 | 7 | | | | | | | | |
| 721443-2-00 | 1-9 | 741745-2-00 | 4 | 778832-0-00 | 6 | | | | | | | | |
| 721454-2-00 | 1 | 741956-2-00 | 2-3 | 778833-0-00 | 6 | | | | | | | | |

TAV. 1

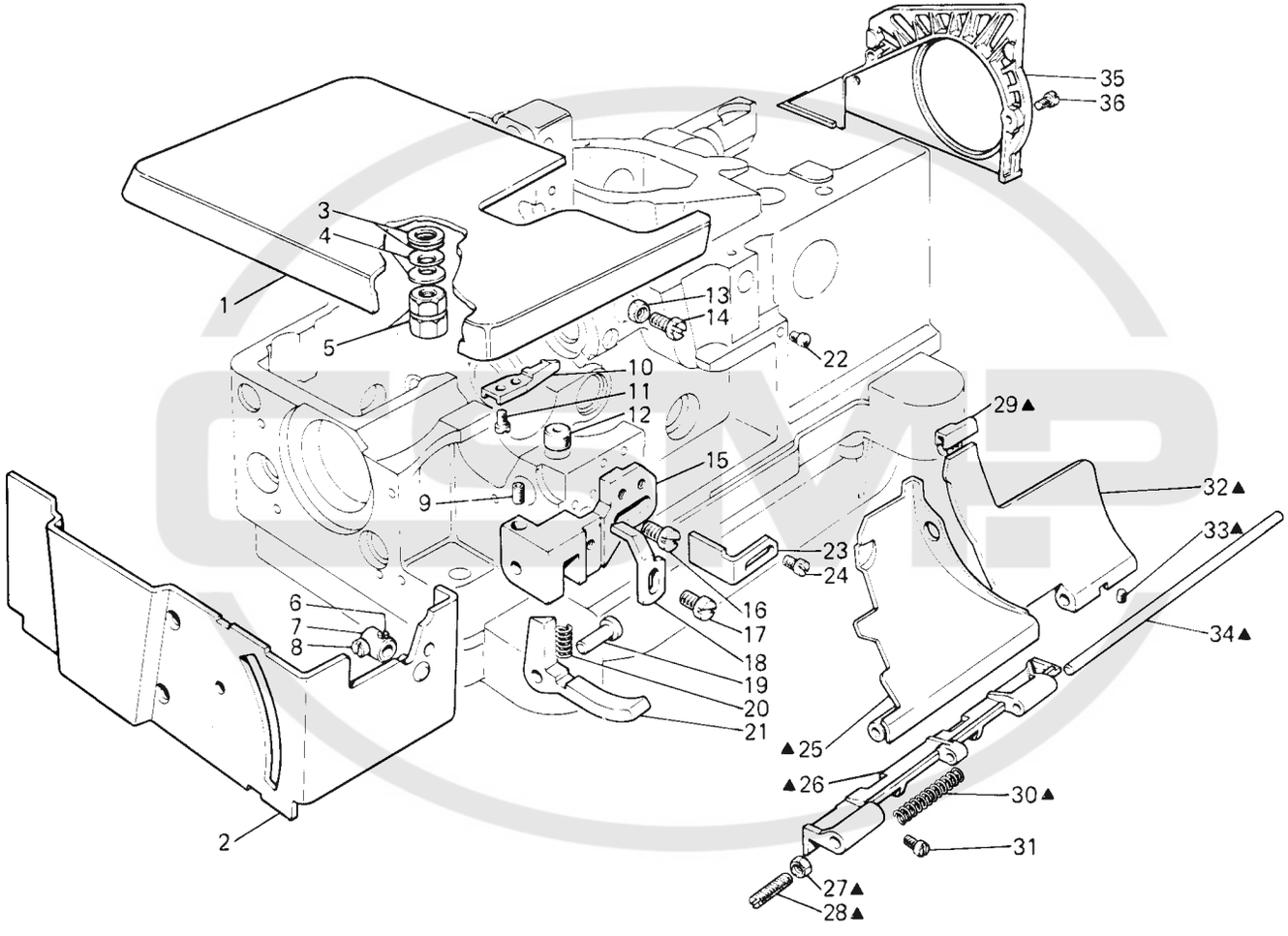
35
36
3
4
1
5
13
14
22
10
11
12
29▲
15
32▲
9
33▲
23
24
6
7
8
16
17
34▲
18
19
20
21
▲25
▲26
30▲
31
2
27▲
28▲

| Fig. N. Abb. N. | Part. N. Bestell N. Piece N. Pieza N. | Qt. Anzahl | DESCRIZIONE | DESCRIPTION | DESCRIPTION | BENENNUNG | DESCRIPCION |
|---|---|---|---|---|---|---|---|
| ▲ | 208060-4-00 | 1 | sportello anteriore completo | front cover assembly | carter avant complet | | |
| 1 | 207955-2-01 | 1 | piano di lavoro | working plate | plan de travail | | |
| 2 | 208022-2-00 | 1 | carter laterale | side cover | carter latéral | | |
| 3 | 704428-2-00 | 2 | rondella | washer | rondelle | | |
| 4 | 702415-0-00 | 2 | molla a tazza | cup spring | ressort à tasse | | |
| 5 | 208165-0-00 | 2 | dado | nut | écrou | | |
| 6 | 730023-2-00 | 1 | vite | screw | vis | | |
| 7 | 206734-2-00 | 1 | morsetto con viti | clamp with screw | collier de serrage avec vis | | |
| 8 | 721435-2-00 | 1 | vite | screw | vis | | |
| 9 | 729022-2-00 | 1 | vite | screw | vis | | |
| 10 | 207985-0-00 | 1 | gancio | hook | crochet | | |
| 11 | 721454-2-00 | 2 | vite | screw | vis | | |
| 12 | 207958-0-01 | 1 | gommino | dumper | caoutchouc | | |
| 13 | 746007-2-00 | 1 | dado | nut | écrou | | |
| 14 | 202214-0-11 | 1 | vite | screw | vis | | |
| 15 | 207981-0-00 | 1 | supporto | support | support | | |
| 16 | 741963-0-00 | 2 | vite | screw | vis | | |
| 17 | 741658-2-00 | 1 | vite | screw | vis | | |
| 18 | 207988-0-00 | 1 | squadretta | bracket | équerre | | |
| 19 | 207980-0-00 | 1 | perno | pin | pivot | | |
| 20 | 307137-0-00 | 1 | molla | spring | ressort | | |
| 21 | 207983-0-00 | 1 | leva | lever | levier | | |
| 22 | 207856-0-00 | 1 | gommino | dumper | caoutchouc | | |
| 23 | 207984-0-00 | 1 | squadretta | bracket | équerre | | |
| 24 | 721412-2-00 | 2 | vite | screw | vis | | |
| 25 | 208080-2-00 | 1 | sportello scorrevole | sliding cover | couvercle coulissant | | |
| 26 | 206756-0-01 | 1 | cerniera | hinge | charnière | | |
| 27 | 746208-2-00 | 1 | dado | nut | écrou | | |
| 28 | 206769-0-10 | 1 | vite di regolazione | adjustment screw | vis de réglage | | |
| 29 | 206764-0-00 | 1 | zoccolo | block | socle | | |
| 30 | 206768-0-00 | 1 | molla | spring | ressort | | |
| 31 | 721443-2-00 | 4 | vite | screw | vis | | |
| 32 | 207858-0-00 | 1 | sportello ribaltabile | cover | couvercle | | |
| 33 | 745800-2-00 | 1 | vite | screw | vis | | |
| 34 | 206767-0-00 | 1 | perno | pin | pivot | | |
| 35 | 206685-0-00 | 1 | carter coprincinghia | cover | carter | | |
| 36 | 722063-2-00 | 2 | vite | screw | vis | | |

CSMP

TAV. 2

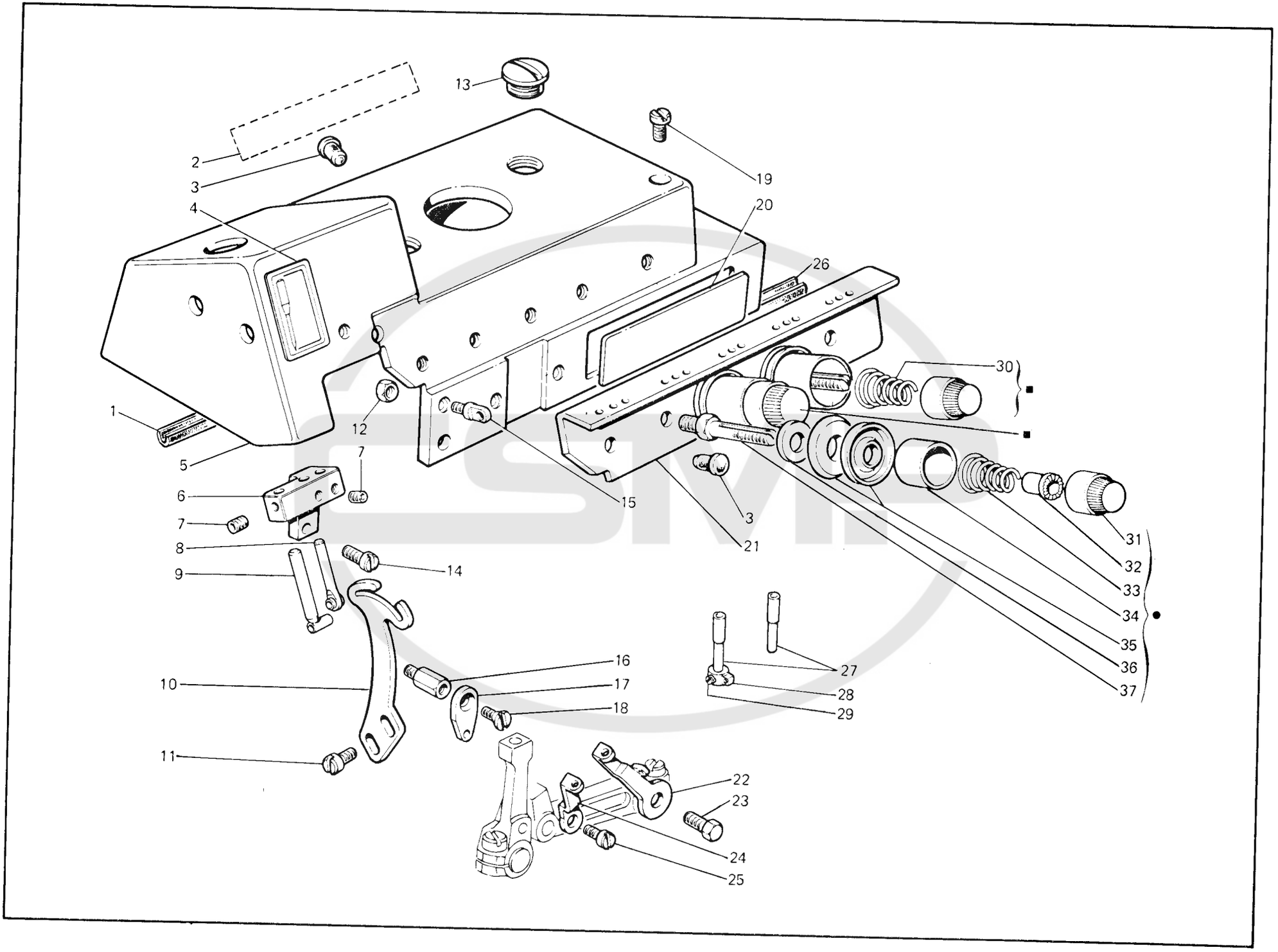
1
2
3
4
5
6
7
7
8
9
10
11
12
13
14
15
16
17
18
19
20
21
22
23
24
25
26
27
28
29
30
31
32
33
34
35
36
37

| Fig. N. Abb. N. | Part. N. Bestell N. Piece N. Pieza N. | Qt. Anzahl | DESCRIZIONE | DESCRIPTION | DESCRIPTION | BENENNUNG | DESCRIPCION |
|---|---|---|---|---|---|---|---|
| ■ | 206341-4-00 | 2 | tensione completa | tensione assembly | tension complète | | |
| ● | 206342-4-00 | 1 | tensione completa | tension assembly | tension complète | | |
| 1 | 208091-0-01 | 1 | guarnizione | gasket | garniture | | |
| 2 | 207668-0-00 | 1 | decalcomania | decal | décalcomanie | | |
| 3 | 207893-0-00 | 4 | tappo | plug | bouchon | | |
| 4 | 788001-0-01 | 1 | decalcomania sist. aghi | needle syst. decal | décalcomanie sist. aiguilles | | |
| 5 | 207910-0-00 | 1 | coperchio superiore | upper cover | couvercle sup. | | |
| 6 | 209767-0-00 | 1 | supporto pass. aghi | support | support | | |
| 7 | 745800-2-00 | 2 | vite | screw | vis | | |
| 8 | 208184-2-00 | 1 | passafilo completo | thread guide assembly | passe-fil complet | | |
| 9 | 202267-2-13 | 1 | passafilo ago | needle thread guide | passe-fil aiguille | | |
| 10 | 207872-0-00 | 1 | tendifilo ago | needle thread take-up | tendeur du fil aiguille | | |
| 11 | 741558-0-00 | 2 | vite | screw | vis | | |
| 12 | 733503-0-00 | 2 | dado | nut | écrou | | |
| 13 | 207968-0-01 | 2 | tappo | plug | bouchon | | |
| 14 | 741956-2-00 | 2 | vite | screw | vis | | |
| 15 | 206711-0-00 | 3 | passafilo | thread guide | passe-fil | | |
| 16 | 206755-0-00 | 1 | colonnina per passafilo | threaded tube | tube pour passe-fil | | |
| 17 | 206812-0-00 | 1 | passafilo crochet superiore | upper looper thread guide | passe-fil crochet sup. | | |
| 18 | 744631-2-00 | 1 | vite | screw | vis | | |
| 19 | 721484-2-00 | 3 | vite | screw | vis | | |
| 20 | 207669-0-00 | 1 | targhetta | plate | plaque | | |
| 21 | 207919-0-00 | 1 | piastra passafili | plate thread guide | plaque passe-fil | | |
| 22 | 206650-0-00 | 1 | tendifilo crochet inf. | thread take-up | tendeur du fil | | |
| 23 | 720431-2-00 | 1 | vite | screw | vis | | |
| 24 | 202279-0-10 | 1 | tendifilo | thread take-up | tendeur du fil | | |
| 25 | 741657-0-00 | 1 | vite | screw | vis | | |
| 26 | 208090-0-01 | 1 | guarnizione | gasket | garniture | | |
| 27 | 206740-0-00 | 2 | tubetto passafilo | pipe thread guide | tube passe-fil | | |
| 28 | 203135-2-10 | 1 | passafilo con vite | thread guide with screw | passe-fil avec vis | | |
| 29 | 745002-0-00 | 1 | vite | screw | vis | | |
| 30 | 202227-0-10 | 2 | molla Ø 0,8 mm. | spring Ø 0,8 mm. | ressort Ø 0,8 mm. | | |
| 31 | 202558-2-01 | 3 | pomolo | knob | pommeau | | |
| 32 | 202229-0-10 | 3 | bussola | bush | bague | | |
| 33 | 202228-0-10 | 1 | molla Ø 1 mm. | spring Ø 1 mm. | ressort Ø 1 mm. | | |
| 34 | 202556-0-01 | 3 | scodellino | cup | cuvette | | |
| 35 | 300218-0-10 | 6 | disco tensione | tension disc | disque tension | | |
| 36 | 206754-0-00 | 3 | rondella | washer | rondelle | | |
| 37 | 206747-0-01 | 1 | perno | pin | pivot | | |

TAV.3

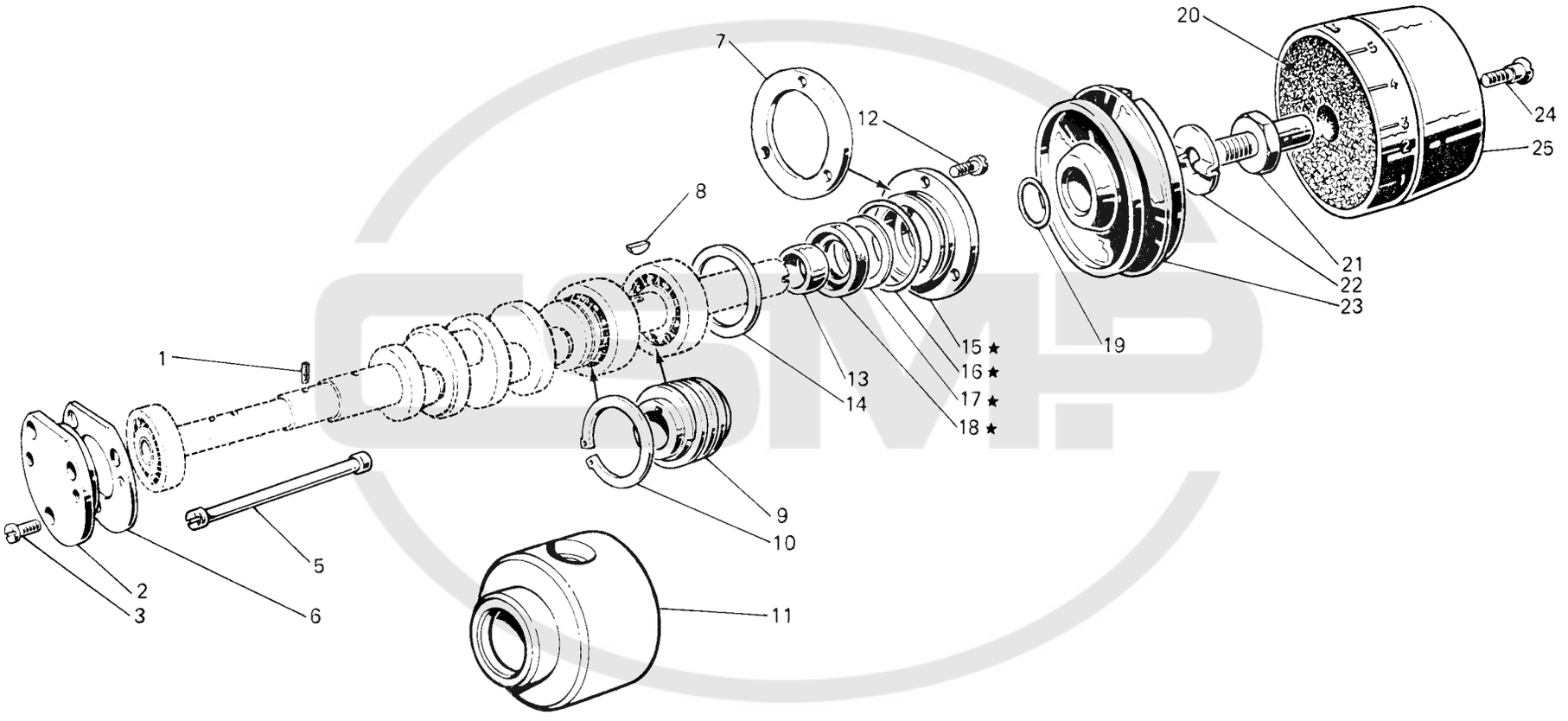

| Fig. N. Abb. N. | Part. N. Bestell N. Piece N. Pieza N. | Qt. Anzahl | DESCRIZIONE | DESCRIPTION | DESCRIPTION |
|---|---|---|---|---|---|
| ★ | 206697-4-01 | 1 | gruppo flangia con anelli | flange with ring assembly | groupe flasque avec anneau |
| 1 | 206708-0-00 | 1 | stoppino | wick | mèche |
| 2 | 206680-0-01 | 1 | flangia sinistra | left flange | flasque gauche |
| 3 | 741956-2-00 | 3 | vite | screw | vis |
| | | 1 | | | |
| 5 | 206974-0-00 | 1 | limitatore olio | oil limiter | limiteur huile |
| 6 | 206543-0-01 | 1 | guarnizione | gasket | garniture |
| 7 | 206544-0-00 | 1 | guarnizione | gasket | garniture |
| 8 | 204122-0-10 | 1 | chiavetta | key | clavette |
| 9 | 206556-0-01 | 1 | vite senza fine | worm screw | vis sans fin |
| 10 | 202386-0-10 | 1 | anello elastico | spring ring | anneau ressort |
| 11 | 206682-0-01 | 1 | bussola | bush | bague |
| 12 | 722063-2-00 | 3 | vite | screw | vis |
| 13 | 206692-0-00 | 1 | distanziale albero principale | spacer | entretoise |
| 14 | 206689-0-01 | 1 | anello compensazione | ring | anneau |
| 15 | 206699-0-02 | 1 | flangia | flange | flasque |
| 16 | 701133-0-00 | 1 | anello di tenuta | retainer ring | bague d'étanchéité |
| 17 | 206693-0-00 | 1 | rondella | washer | rondelle |
| 18 | 700630-0-00 | 1 | anello di tenuta | retainer ring | bague d'étanchéité |
| 19 | 701116-0-00 | 1 | anello di tenuta | retainer ring | bague d'étanchéité |
| 20 | 206507-0-00 | 1 | tampone per volantino | pad | tampon |
| 21 | 206683-0-00 | 1 | perno volantino | pin | pivot |
| 22 | 206684-0-10 | 1 | chiavetta albero principale | key | clavette |
| 23 | 206508-0-00 | 1 | volantino | handwheel | volant |
| 24 | 202492-0-10 | 1 | vite | screw | vis |
| 25 | 206679-0-00 | 1 | coperchio volantino | handwheel cover | couvercle volant |

TAV. 4

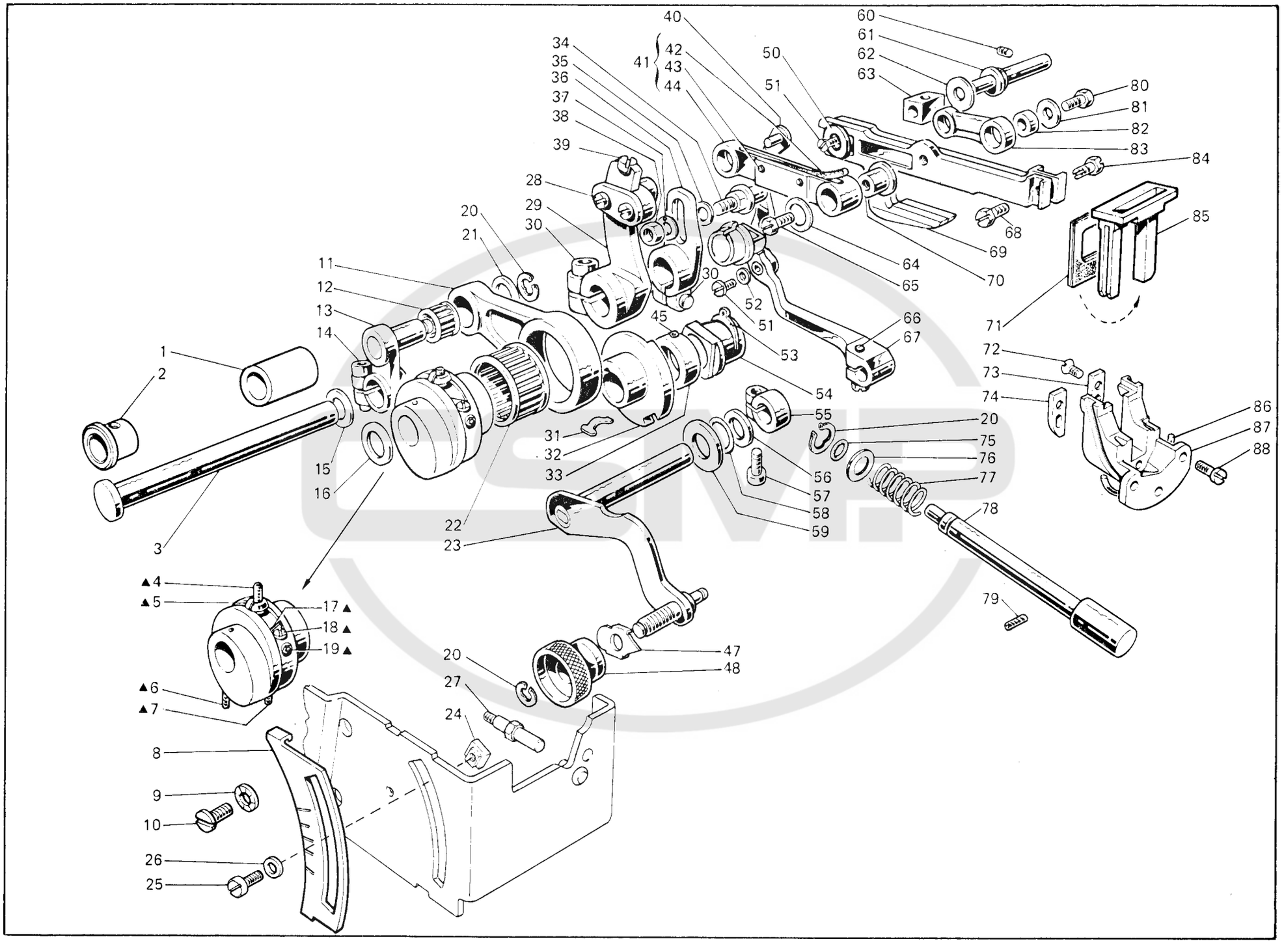
1
2
3
4
5
6
7
8
9
10
11
12
13
14
15
16
17
18
19
20
21
22
23
24
25
26
27
28
29
30
31
32
33
34
35
36
37
38
39
40
41
42
43
44
45
47
48
50
51
52
53
54
55
56
57
58
59
60
61
62
63
64
65
66
67
68
69
70
71
72
73
74
75
76
77
78
79
80
81
82
83
84
85
86
87
88

| N. Fig. Abb. | Part. N. Bestell N. Piece N. Pieza N. | Qt. Anzahl | DESCRIZIONE | DESCRIPTION | DESCRIPTION |
|---|---|---|---|---|---|
| ▲ | 207950-4-00 | 1 | gruppo ecc. reg. trasp. | eccentric assembly | groupe excentrique |
| 1 | 206594-0-00 | 1 | bussola | bush | bague |
| 2 | 206595-0-01 | 1 | bussola | bush | bague |
| 3 | 206593-0-00 | 1 | contralbero trasp. | trans.coutershaft | axe transport |
| 4 | 729051-2-00 | 1 | vite | screw | vis |
| 5 | 206603-0-11 | 1 | fermo eccentrico | eccentric retainer | pièce bloc. excentrique |
| 6 | 745815-2-00 | 1 | vite | screw | vis |
| 7 | 727884-0-00 | 1 | vite | screw | vis |
| 8 | 206797-0-00 | 1 | piastrina per indice | plate | plaque |
| 9 | 703405-0-00 | 4 | rondella elastica | spring washer | rondelle élastique |
| 10 | 724895-2-00 | 4 | vite | screw | vis |
| 11 | 206599-0-01 | 1 | biella com. trasp. | transport con-rod | bielle comm. transport |
| 12 | 201358-0-10 | 1 | gabbia a rullini | needles cage | cage à aiguilles |
| 13 | 206598-3-00 | 1 | braccio a man. con vite | crank arm with screw | bras à maniv. avec vis |
| 14 | 744334-2-00 | 1 | vite | screw | vis |
| 15 | 704841-0-00 | 1 | rondella | washer | rondelle |
| 16 | 206602-0-00 | 1 | rondella | washer | rondelle |
| 17 | 202412-0-11 | 1 | lardone | gib | lardon |
| 18 | 202473-0-11 | 2 | vite | screw | vis |
| 19 | 730011-2-00 | 2 | vite | screw | vis |
| 20 | 700207-0-00 | 3 | anello elastico | spring ring | anneau ressort |
| 21 | 206546-0-00 | 1 | rondella | washer | rondelle |
| 22 | 202385-0-10 | 1 | gabbia a rullini | needles cage | cage à aiguilles |
| 23 | 206790-2-11 | 1 | leva | lever | levier |
| 24 | 211612-0-01 | 2 | arresto reg. | stopping | butée |
| 25 | 721475-2-00 | 2 | vite | screw | vis |
| 26 | 704409-2-00 | 2 | rondella | washer | rondelle |
| 27 | 206733-0-01 | 1 | vite fissa carter lat. | screw | vis |
| 28 | 741546-2-00 | 2 | vite | screw | vis |
| 29 | 206592-3-00 | 1 | manovella tras. con viti | tran. crank with screw | manivelle trans. avec vis |
| 30 | 744332-2-00 | 2 | vite | screw | vis |
| 31 | 206872-0-00 | 1 | molla | spring | ressort |
| 32 | 206605-0-01 | 1 | eccentrico | eccentric | excentrique |
| 33 | 206606-2-00 | 1 | anello di rasamento | shim | bague |
| 34 | 202063-0-10 | 1 | spina | pin | goupille |
| 35 | 704808-0-00 | 1 | rondella | washer | rondelle |
| 36 | 206584-2-00 | 1 | braccio manovella | crank arm | bras manivelle |
| 37 | 206580-2-00 | 1 | rondella con spina | washer with pin | rondelle avec goupille |
| 38 | 746008-0-00 | 1 | dado | nut | écrou |
| 39 | 741413-2-00 | 1 | vite | screw | vis |
| 40 | 207724-2-00 | 1 | giunto | joint | joint |
| 41 | 206615-4-00 | 1 | biellino completo | con-rod assembly | petite-bielle complète |
| 42 | 778417-0-00 | 1 | stoppino | wick | mèche |
| 43 | 200490-0-00 | 2 | spillo | needle | épingle |
| 44 | 206587-0-01 | 1 | biellino | con-rod | petite-bielle |
| 45 | 745812-2-00 | 2 | vite | screw | vis |
| 47 | 206796-0-00 | 1 | indice | index | indice |
| 48 | 206798-0-00 | 1 | bottone | button | bouton |
| 50 | 202475-0-10 | 1 | rondella | washer | rondelle |
| 51 | 724032-0-00 | 2 | vite | screw | vis |
| 52 | 207719-0-00 | 1 | rondella | washer | rondelle |
| 53 | 201610-0-01 | 1 | anello elastico | spring ring | anneau ressort |
| 54 | 206617-0-01 | 1 | blocchetto | block | bloc |
| 55 | 100620-2-10 | 1 | morsetto con vite | clamp with screw | collier de serr. avec vis |
| 56 | 704829-0-00 | 1 | rondella | washer | rondelle |
| 57 | 741745-2-00 | 1 | vite | screw | vis |
| 58 | 701007-0-00 | 1 | anello di tenuta | retainer ring | bague d'étanchéité |
| 59 | 705230-0-00 | 1 | rondella | washer | rondelle |
| 60 | 202478-0-10 | 1 | vite | screw | vis |
| 61 | 206613-0-00 | 1 | perno eccentrico | eccentric pin | pivot excentrique |
| 62 | 705408-0-00 | 1 | rondella | washer | rondelle |
| 63 | 202033-0-10 | 1 | blocchetto | block | bloc |
| 64 | 705008-0-00 | 1 | rondella | washer | rondelle |
| 65 | 206588-0-00 | 1 | vite | screw | vis |
| 66 | 740053-2-00 | 1 | vite | screw | vis |
| 67 | 207711-2-10 | 1 | braccio reg. diff. | differential arm | bras reg. différentiel |
| 68 | 202489-0-10 | 1 | vite | screw | vis |
| 69 | 207942-3-00 | 1 | gruppo slitta | slide assembly | groupe glissière |
| 70 | 206586-0-01 | 1 | bussola per biellino | bush | bague |
| 71 | 207944-0-00 | 2 | guarn.raschia olio | gasket | garniture |
| 72 | 744512-4-00 | 2 | vite | screw | vis |
| 73 | 207947-0-00 | 1 | piastrina | plate | plaque |
| 74 | 207945-0-00 | 1 | piastrina | plate | plaque |
| 75 | 701004-0-00 | 1 | anello | ring | anneau |
| 76 | 704314-2-00 | 1 | rondella | washer | rondelle |
| 77 | 202408-0-10 | 1 | molla | spring | ressort |
| 78 | 206618-0-10 | 1 | pulsante reg. punto | push-button | poussoir |
| 79 | 729032-2-00 | 1 | vite | screw | vis |
| 80 | 202490-0-10 | 1 | vite | screw | vis |
| 81 | 705208-0-00 | 1 | rondella | washer | rondelle |
| 82 | 202032-0-11 | 1 | bussolina | bush | bague |
| 83 | 206583-0-00 | 1 | biellino | con-rod | petite bielle |
| 84 | 202488-0-10 | 1 | vite | screw | vis |
| 85 | 207946-0-01 | 1 | telaio raschia olio | oil scraper frame | râcheur huile |
| 86 | 207948-0-00 | 1 | guarnizione | gasket | garniture |
| 87 | 207943-2-00 | 1 | guida slitta | slide guide | guide coulissant |
| 88 | 722063-2-00 | 3 | vite | screw | vis |

TAV. 5

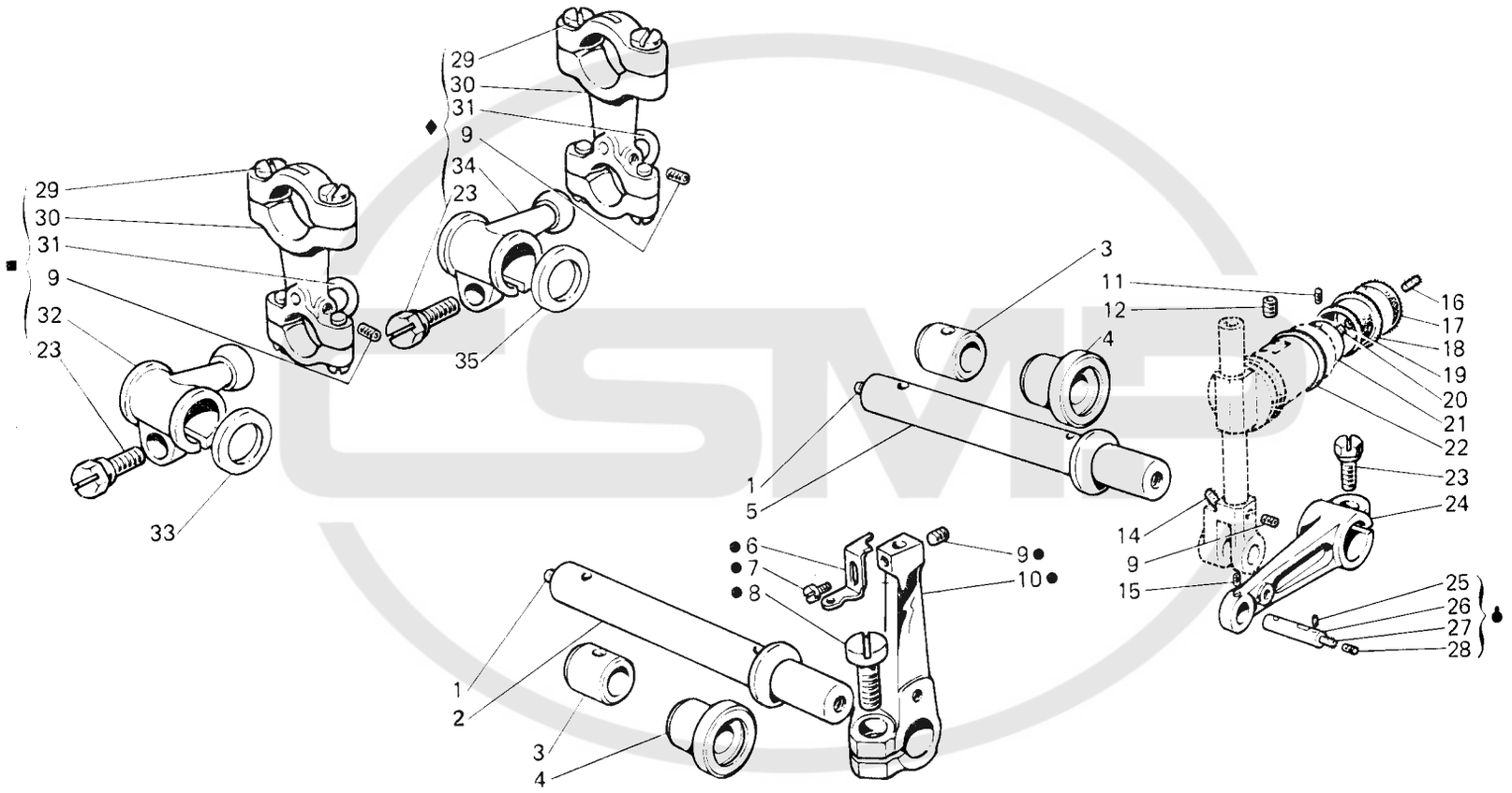
29
30
31
9
32
23
33
29
30
31
9
34
23
35
3
11
12
4
1
5
16
17
18
19
20
21
22
23
24
14
9
15
25
26
27
28
6
7
8
9
10
1
2
3
4

| Fig. N. Abb. N. | Part. N. Bestell N. Piece N. Pieza N. | Qt. Anzahl | DESCRIZIONE | DESCRIPTION | DESCRIPTION | BENENNUNG | DESCRIPCION |
|---|---|---|---|---|---|---|---|
| ■ | 206453-4-00 | 1 | gruppo manicotto con biella | coupling ass. with con-rod | groupe manchon avec bielle | | |
| ♦ | 206452-4-00 | 1 | gruppo manicottocon biella | coupling ass. with con rod | groupe manchon avec bielle | | |
| ♦ | 206645-4-02 | 1 | spina completa | pin assembly | goupille compl. | | |
| ● | 208039-4-00 | 1 | gruppo porta crochet inf. | lower looper ass. | groupe porte crochet inf. | | |
| 1 | 206695-0-00 | 2 | tappo per albero | plug with shaft | bouchoun pour arbre | | |
| 2 | 207096-2-00 | 1 | albero crochet inferiore | lower looper shaft | arbre crochet inférieur | | |
| 3 | 206651-0-00 | 2 | bussola | bush | bague | | |
| 4 | 202065-0-20 | 2 | bussola | bush | bague | | |
| 5 | 207095-2-00 | 1 | albero crochet superiore | upper looper shaft | arbre crochet supérieur | | |
| 6 | 208015-0-00 | 1 | squadretta | braket | équerre | | |
| 7 | 741415-2-00 | 1 | vite | screw | vis | | |
| 8 | 721883-0-00 | 1 | vite | screw | vis | | |
| 9 | 745812-2-00 | 3 | vite | screw | vis | | |
| 10 | 206654-2-10 | 1 | porta crochet inf. | lower looper holder | porte crochet inférieur | | |
| 11 | 745800-2-00 | 1 | vite | screw | vis | | |
| 12 | 745168-0-00 | 1 | vite | screw | vis | | |
| 14 | 778403-0-00 | 1 | stoppino | wick | mèche | | |
| 15 | 745810-2-00 | 1 | vite | screw | vis | | |
| 16 | 778236-0-00 | 1 | stoppino | wick | mèche | | |
| 17 | 206686-0-00 | 1 | disco lubrificazione guida | lubrication disc | disque graissage | | |
| 18 | 202720-0-00 | 1 | paraolio | oil retainer | pare-huile | | |
| 19 | 778405-0-00 | 1 | stoppino | wick | mèche | | |
| 20 | 778410-0-00 | 1 | stoppino | wick | mèche | | |
| 21 | 202062-2-10 | 1 | anello con vite | ring with screw | anneau avec vis | | |
| 22 | 701113-0-00 | 1 | anello di tenuta | retainer ring | anneau d'étanchéité | | |
| 23 | 201128-0-10 | 3 | vite | screw | vis | | |
| 24 | 206652-2-01 | 1 | braccio | arm | bras | | |
| 25 | 778202-0-00 | 4 | stoppino | wick | mèche | | |
| 26 | 202086-0-12 | 1 | spina | pin | goupille | | |
| 27 | 778401-0-00 | 1 | stoppino | wick | mèche | | |
| 28 | 745002-0-00 | 1 | vite | screw | vis | | |
| 29 | 722089-2-00 | 8 | vite per biella | screw | vis | | |
| 30 | 209270-2-01 | 2 | biella con viti | con-rod with screw | bielle avec vis | | |
| 31 | 209272-0-00 | 2 | cavallotto | coupling | cavalier | | |
| 32 | 206659-2-02 | 1 | manicotto | coupling | manchon | | |
| 33 | 704845-0-00 | 1 | rondella 4,5 mm. | washer 4,5 mm. | rondelle 4,5 mm | | |
| 34 | 206658-2-02 | 1 | manicotto | coupling | manchon | | |
| 35 | 704848-0-00 | 1 | rondella 2 mm. | washer 2 mm. | rondelle 2 mm. | | |

TAV. 6

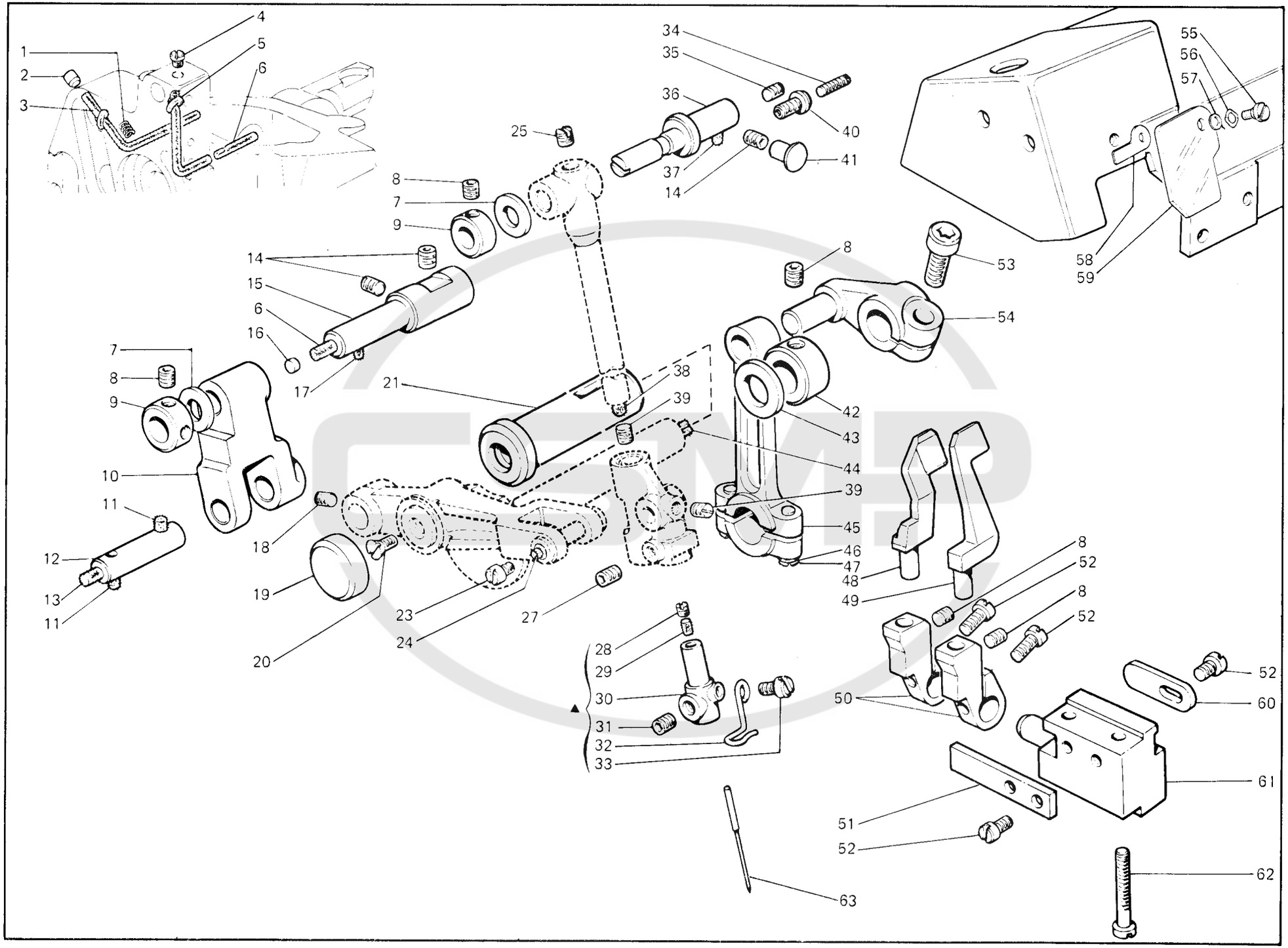
1
2
3
4
5
6
7
8
9
10
11
12
13
14
15
16
17
18
19
20
21
23
24
25
27
28
29
30
31
32
33
34
35
36
37
38
39
40
41
42
43
44
45
46
47
48
49
50
51
52
53
54
55
56
57
58
59
60
61
62
63

| Fig. N. Abb. N. | Part. N. Bestell N. Piece N. Pieza N. | Qt. Anzahl | DESCRIZIONE | DESCRIPTION | DESCRIPTION |
|---|---|---|---|---|---|
| ▲ | 207510-4-00 | 1 | morsetto ago compl. | needle clamp ass. | collier de serrage compl. |
| 1 | 208164-0-00 | 1 | molla | spring | ressort |
| 2 | 301608-0-00 | 1 | tappo | plug | bouchon |
| 3 | 778832-0-00 | 1 | stoppino | wick | mèche |
| 4 | 742838-2-00 | 1 | vite | screw | vis |
| 5 | 778833-0-00 | 1 | stoppino | wick | mèche |
| 6 | 778417-0-00 | 2 | stoppino | wick | mèche |
| 7 | 309560-0-00 | 2 | rondella | washer | rondelle |
| 8 | 745812-2-00 | 7 | vite | screw | vis |
| 9 | 207692-2-00 | 2 | anello di rasamento | ring | anneau |
| 10 | 207932-0-10 | 1 | leva | lever | levier |
| 11 | 778204-0-00 | 3 | stoppino | wick | mèche |
| 12 | 207930-0-10 | 1 | spina | pin | goupille |
| 13 | 778414-0-00 | 1 | stoppino | wick | mèche |
| 14 | 729034-2-00 | 3 | vite | screw | vis |
| 15 | 208163-4-11 | 1 | perno completo | pin assembly | pivot complet |
| 16 | 206521-0-00 | 1 | tappo | plug | bouchon |
| 17 | 778511-0-00 | 2 | stoppino | wick | mèche |
| 18 | 745114-0-00 | 1 | vite | screw | vis |
| 19 | 206533-0-00 | 1 | coperchio per leva | cover for lever | couvercle pour levier |
| 20 | 724460-0-00 | 1 | vite | screw | vis |
| 21 | 206538-0-10 | 1 | bussola | bush | bague |
| 23 | 741405-0-00 | 1 | vite | screw | vis |
| 24 | 778208-0-00 | 1 | stoppino | wick | mèche |
| 25 | 310167-0-00 | 1 | vite | screw | vis |
| 27 | 729012-2-00 | 1 | vite | screw | vis |
| 28 | 727021-0-00 | 1 | vite | screw | vis |
| 29 | 778206-0-00 | 1 | stoppino | wick | mèche |
| 30 | 207520-2-00 | 1 | morsetto | clamp | collier de serrage |
| 31 | 745810-2-00 | 1 | vite | screw | vis |
| 32 | 207540-0-00 | 1 | guidafilo | thread guide | guide fil |
| 33 | 741415-2-00 | 1 | vite | screw | vis |
| 34 | 729051-2-00 | 1 | vite | screw | vis |
| 35 | 727014-2-00 | 1 | vite | screw | vis |
| 36 | 207927-0-01 | 1 | perno | pin | pivot |
| 37 | 778419-0-00 | 1 | stoppino | wick | mèche |
| 38 | 778503-0-00 | 1 | stoppino | wick | mèche |
| 39 | 745002-0-00 | 2 | vite | screw | vis |
| 40 | 202529-0-10 | 1 | vite di fermo | screw | vis |
| 41 | 207574-0-00 | 1 | tappo | plug | bouchon |
| 42 | 206606-2-00 | 1 | anello di rasamento | ring | anneau |
| 43 | 705030-0-00 | 1 | rondella | washer | rondelle |
| 44 | 778837-0-00 | 1 | stoppino | wick | mèche |
| 45 | 208520-2-10 | 1 | biella completa | con-rod assembly | bielle compl. |
| 46 | 704213-2-00 | 2 | rondella | washer | rondelle |

| Fig. N. Abb. N. | Part. N. Bestell N. Piece N. Pieza N. | Qt. Anzahl | DESCRIZIONE | DESCRIPTION | DESCRIPTION |
|---|---|---|---|---|---|
| 47 | 743469-2-00 | 2 | vite | screw | vis |
| 48 | 207992-0-61 | 1 | salva ago | rear needle guard | protège-aiguille |
| 49 | 207995-0-60 | 1 | spingi asola | front needle guard | pare-boucle |
| 50 | 207998-2-00 | 2 | porta salva ago e spingi asola | front and rear needle guard holder | porte protège-aiguille et pare-boucle |
| 51 | 207991-0-00 | 1 | piastrina | plate | plaque |
| 52 | 741552-0-00 | 5 | vite | screw | vis |
| 53 | 744334-2-00 | 1 | vite | screw | vis |
| 54 | 206540-2-10 | 1 | manovella alb. sup. | crank | manivelle |
| 55 | 208224-0-00 | 1 | vite | screw | vis |
| 56 | 208220-0-00 | 1 | anello elastico | spring ring | anneau ressort |
| 57 | 704630-0-00 | 1 | rondella | washer | rondelle |
| 58 | 208222-0-00 | 1 | piastrina | plate | plaque |
| 59 | 208221-0-00 | 1 | piastrina protezione | protection plate | plaque protection |
| 60 | 207999-0-00 | 1 | piastrina | plate | plaque |
| 61 | 207990-0-00 | 1 | supporto salva ago | rear needle guard ass. | supporto protège-aiguille |
| 62 | 722480-2-00 | 2 | vite | screw | vis |
| 63 | 765200-6-80 | | ago RIM 27 fin. 80 | needle RIM 27 size 80 | aiguille RIM 27 jauge 80 |

CSMP

TAV. 7

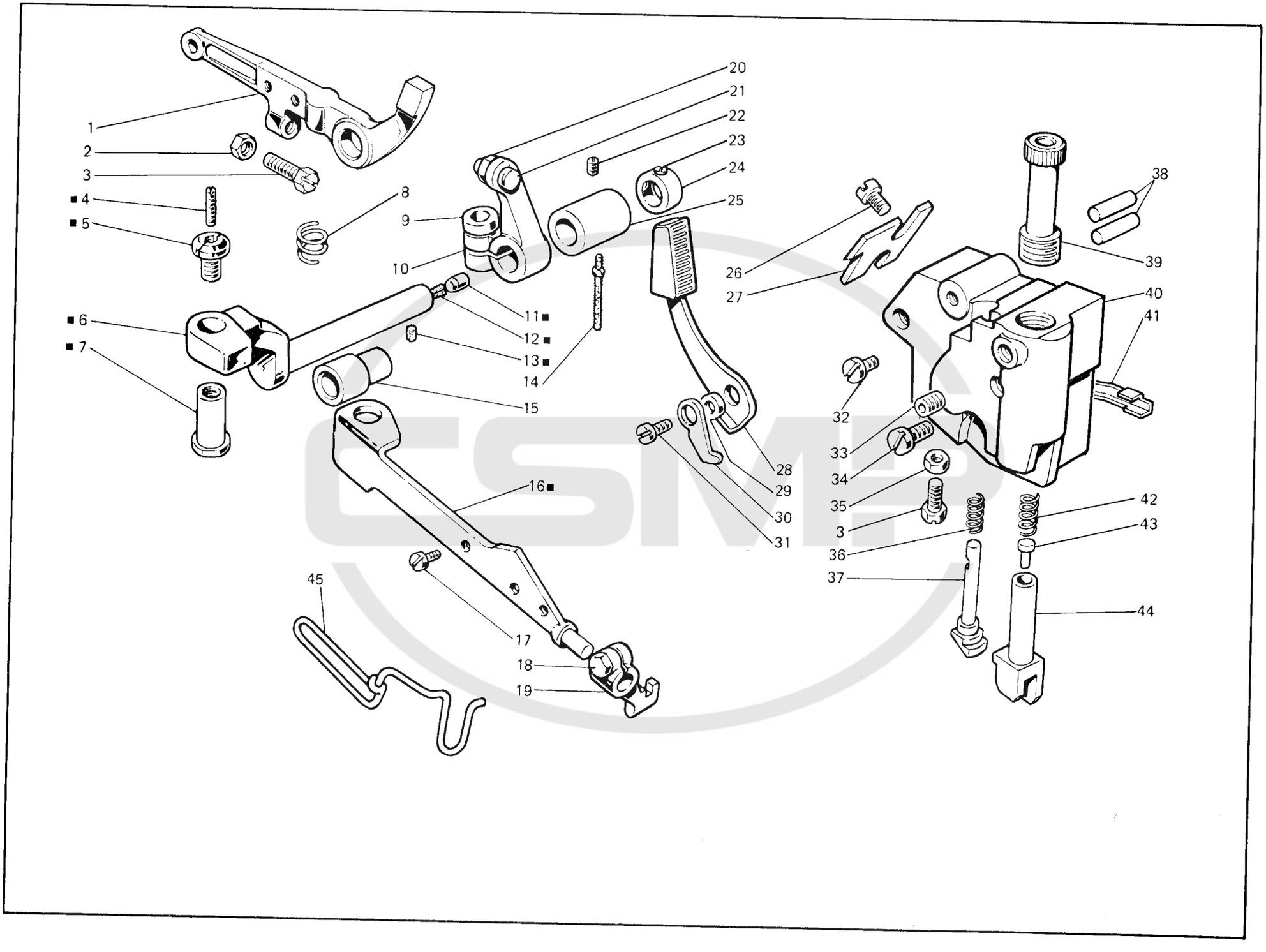
1
2
3
■ 4
■ 5
8
9
10
■ 6
■ 7
11 ■
12 ■
13 ■
14
15
16 ■
17
18
19
45
20
21
22
23
24
25
26
27
28
29
30
31
32
33
34
35
3
36
37
38
39
40
41
42
43
44

| N. N. Fig. Abb. | Part. N. Bestell N. Piece N. Pieza N. | Qt. Anzahl | DESCRIZIONE | DESCRIPTION | DESCRIPTION |
|---|---|---|---|---|---|
| ■ | 207887-4-00 | 1 | leva prem. con perno | presser lever | levier du pied-presséur |
| 1 | 207881-2-00 | 1 | leva alza premist. | lever | levier |
| 2 | 733505-2-00 | 1 | dado | nut | écrou |
| 3 | 202214-0-11 | 2 | vite | screw | vis |
| 4 | 729051-2-00 | 1 | vite | screw | vis |
| 5 | 202529-0-10 | 1 | perno di fermo | pin | pivot |
| 6 | 207878-3-00 | 1 | perno con tappo e stoppini | pin with plung and wicks | pivot avec bouchon et mèches |
| 7 | 206622-0-00 | 1 | spina | pin | pivot |
| 8 | 206621-0-00 | 1 | molla richiamo leva premist. | spring | ressort |
| 9 | 744332-2-00 | 1 | vite | screw | vis |
| 10 | 207876-2-00 | 1 | leva arresto prest. con viti | lever | levier |
| 11 | 301586-0-10 | 1 | pastiglia | plug | bouchon |
| 12 | 778522-0-00 | 1 | stoppino | wick | mèche |
| 13 | 778204-0-00 | 1 | stoppino | wick | mèche |
| 14 | 206620-0-00 | 1 | stoppino | wick | mèche |
| 15 | 207880-0-00 | 1 | bussola | bush | bague |
| 16 | 206808-0-01 | 1 | leva | lever | levier |
| 17 | 741453-0-00 | 2 | vite | screw | vis |
| 18 | 204947-0-10 | 1 | vite | screw | vis |
| 19 | 206810-2-00 | 1 | attacco a morsetto premist. | coupling | raccord |
| 20 | 746020-2-00 | 1 | dado | nut | écrou |
| 21 | 727096-0-00 | 1 | vite | screw | vis |
| 22 | 745812-2-00 | 1 | vite | screw | vis |
| 23 | 745114-0-00 | 2 | vite | screw | vis |
| 24 | 207882-2-00 | 1 | anello con viti | ring | anneau |
| 25 | 207879-0-00 | 1 | bussola | bush | bague |
| 26 | 721434-2-00 | 2 | vite | screw | vis |
| 27 | 207965-0-00 | 1 | arresto | stopping | butée |
| 28 | 208133-2-00 | 1 | leva | lever | levier |
| 29 | 206637-0-00 | 1 | distanziale | spacer | entretoise |
| 30 | 206635-0-00 | 1 | nasello | snug | déclic |
| 31 | 722063-2-00 | 1 | vite | screw | vis |
| 32 | 722123-2-00 | 1 | vite | screw | vis |
| 33 | 202391-0-11 | 1 | vite | screw | vis |
| 34 | 206642-0-00 | 1 | vite | screw | vis |
| 35 | 746007-2-00 | 1 | dado | nut | écrou |
| 36 | 926273-0-00 | 1 | molla | spring | ressort |
| 37 | 207959-0-00 | 1 | tirante | tie-rod | tirant |
| 38 | 202371-0-10 | 2 | spina | pin | goupille |
| 39 | 207967-0-01 | 1 | vite | screw | vis |
| 40 | 207960-0-00 | 1 | supporto | support | support |
| 41 | 207962-0-00 | 1 | guarnizione | gasket | garniture |
| 42 | 203142-0-10 | 1 | molla | spring | ressort |
| 43 | 207626-0-00 | 1 | bottone | buton | bouton |
| 44 | 207625-0-00 | 1 | cannotto | column | fourche |
| 45 | 990694-0-01 | 1 | salvadita | protection | protection |

CSMP

TAV.8

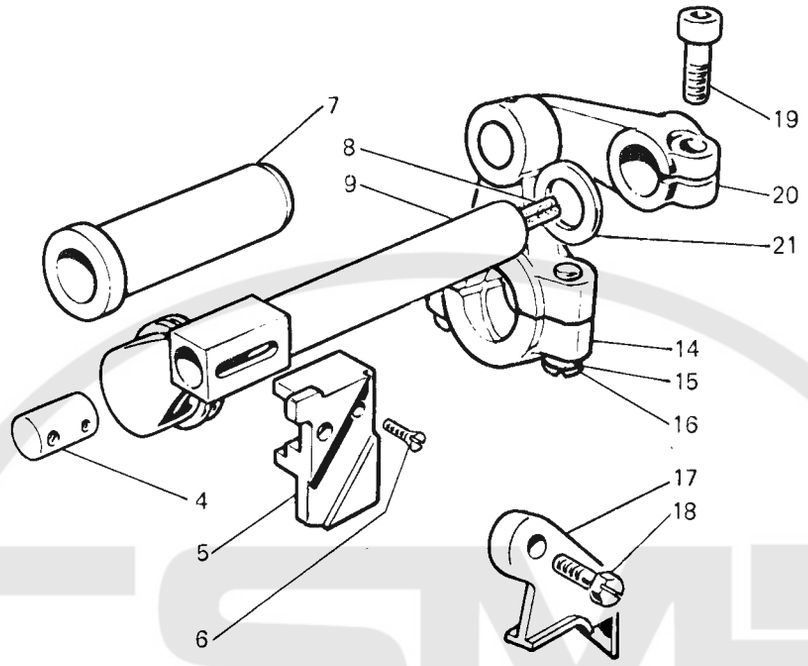


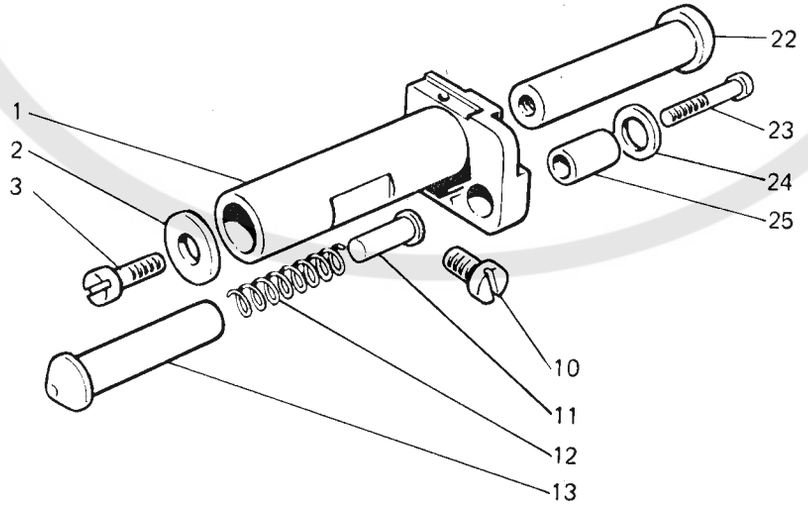

| Fig. N. Abb. N. | Part. N. Piece N. Bestell N. Pieza N. | Qt. Anzahl | DESCRIZIONE | DESCRIPTION | DESCRIPTION |
|---|---|---|---|---|---|
| 1 | 207111-0-00 | 1 | porta coltello inferiore | lower knife holding | porte couteau inférieur |
| 2 | 704409-2-00 | 1 | rondella | washer | rondelle |
| 3 | 742457-2-00 | 1 | vite | screw | vis |
| 4 | 202130-0-11 | 1 | perno | pin | pivot |
| 5 | 207588-0-01 | 1 | placchetta | plate | plaque |
| 6 | 744533-0-00 | 1 | vite | screw | vis |
| 7 | 206539-0-01 | 1 | bussola | bush | bague |
| 8 | 778835-0-00 | 1 | stoppino | wick | mèche |
| 9 | 207861-4-00 | 1 | albero colt. sup. con stoppino | shaft | arbre |
| 10 | 742758-0-00 | 1 | vite | screw | vis |
| 11 | 206758-0-00 | 1 | puntalino | pin | pivot |
| 12 | 202128-0-10 | 1 | molla | spring | ressort |
| 13 | 206757-0-00 | 1 | bussola | bush | bague |
| 14 | 208521-2-00 | 1 | biella completa | con-rod assembly | bielle compl. |
| 15 | 704213-2-00 | 2 | rondella | washer | rondelle |
| 16 | 743469-2-00 | 2 | vite | screw | vis |
| 17 | 207589-0-00 | 1 | staffa | bracket | équerre |
| 18 | 207421-0-01 | 1 | vite | screw | vis |
| 19 | 744334-2-00 | 1 | vite | screw | vis |
| 20 | 206574-2-01 | 1 | manovella alb. coltello sup. | crank for upper knife shaft | manivelle arbre couteau sup. |
| 21 | 705030-0-00 | 1 | rondella | washer | rondelle |
| 22 | 202134-0-11 | 1 | perno | pin | pivot |
| 23 | 722471-2-00 | 1 | vite | screw | vis |
| 24 | 704406-0-00 | 1 | rondella | washer | rondelle |
| 25 | 202129-0-10 | 1 | bussola | bush | bague |

CSMP

TAV.9

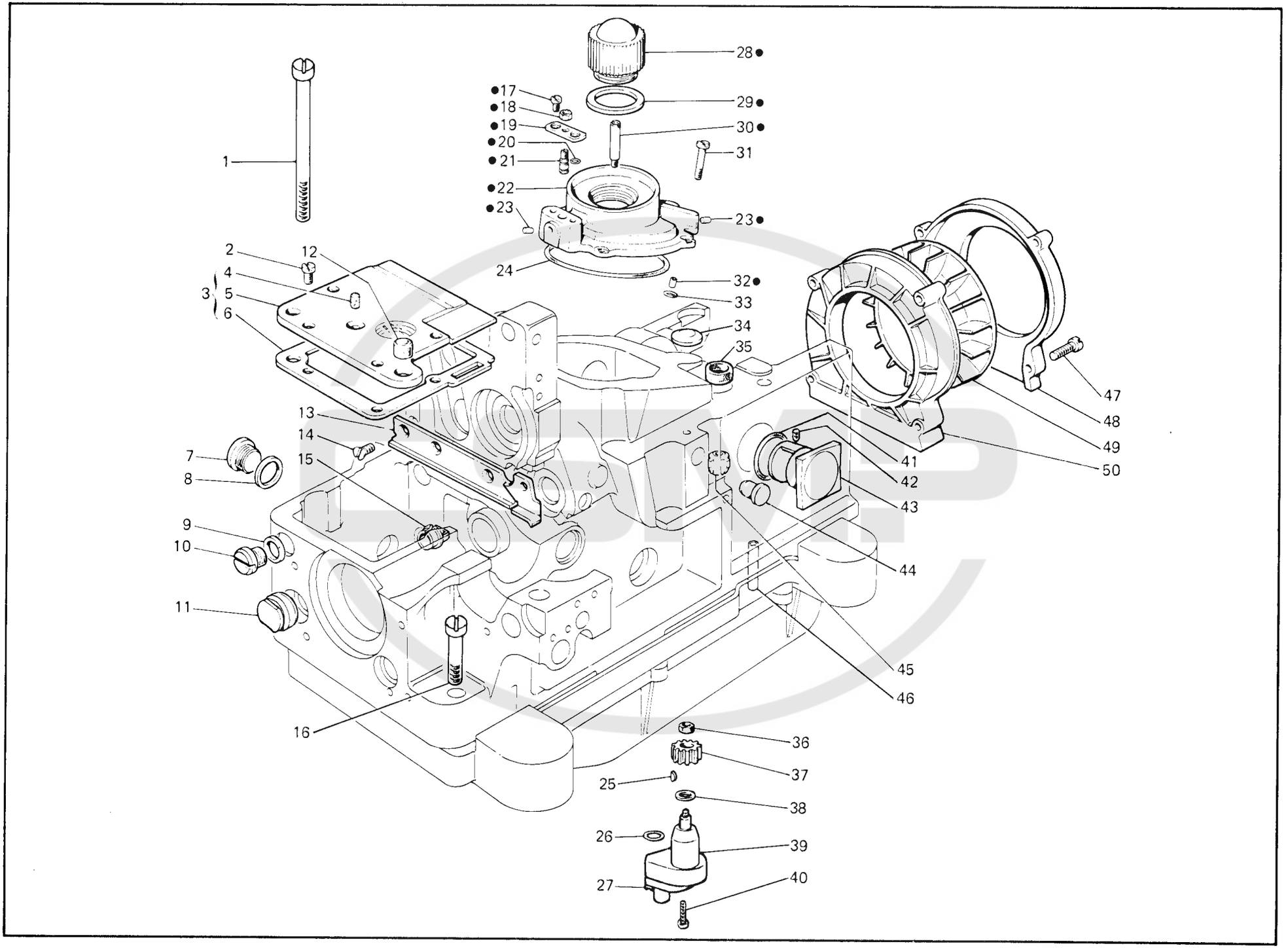
1
2
3
4
5
6
7
8
9
10
11
12
13
14
15
16
17
18
19
20
21
22
23
23
24
25
26
27
28
29
30
31
32
33
34
35
36
37
38
39
40
41
42
43
44
45
46
47
48
49
50

| Fig. N. Abb. N. | Part. N. Piece N. Bestell N. Pieza N. | Qt. Anzahl | DESCRIZIONE | DESCRIPTION | DESCRIPTION |
|---|---|---|---|---|---|
| ● | 207972-4-01 | 1 | coperchio distrib. olio compl. | oil distributor cover assembly | calotte distribution huile compl. |
| 1 | 207917-0-00 | 4 | vite fissa bacinella | screw | vis |
| 2 | 721443-2-00 | 4 | vite | screw | vis |
| 3 | 207951-4-00 | 1 | coperchio completo | cover assembly | couvercle complet |
| 4 | 778241-0-00 | 1 | stoppino | wick | mèche |
| 5 | 207952-2-00 | 1 | coperchio | cover | couvercle |
| 6 | 207953-0-00 | 1 | guarnizione | gasket | garniture |
| 7 | 202026-0-10 | 1 | tappo | plug | bouchon |
| 8 | 705982-0-00 | 1 | guarnizione | gasket | garniture |
| 9 | 705975-0-00 | 1 | guarnizione | gasket | garniture |
| 10 | 202480-0-10 | 1 | tappo | plug | bouchon |
| 11 | 202027-0-10 | 1 | tappo | plug | bouchon |
| 12 | 207954-0-00 | 1 | tappo | plug | bouchon |
| 13 | 207961-0-00 | 1 | carterino | cover | carter |
| 14 | 744730-2-00 | 3 | vite | screw | vis |
| 15 | 206619-0-00 | 1 | vaschetta olio | oil sump | cuvette huile |
| 16 | 742086-2-00 | 1 | vite fissa bacinella | screw | vis |
| 17 | 741535-0-00 | 2 | vite | screw | vis |
| 18 | 746007-2-00 | 1 | dado | nut | écrou |
| 19 | 207979-0-00 | 1 | piastrina | plate | plaque |
| 20 | 701002-0-00 | 1 | anello di tenuta | retainer ring | bague d'étanchéité |
| 21 | 207978-0-00 | 1 | pistoncino | piston | piston |
| 22 | 207970-2-01 | 1 | coperchio con tappo | cover with plug | couvercle avec bouchon |
| 23 | 301586-0-10 | 2 | tappo | plug | bouchon |
| 24 | 701151-0-00 | 1 | anello di tenuta | retainer ring | bague d'étanchéité |
| 25 | 206557-0-00 | 1 | chiavetta | key | clavette |
| 26 | 701004-0-00 | 1 | anello di tenuta | retainer ring | bague d'étanchéité |
| 27 | 721494-2-00 | 2 | vite | screw | vis |
| 28 | 207973-0-01 | 1 | cupolina | cup | coupole |
| 29 | 705970-0-00 | 1 | guarnizione | gasket | garniture |
| 30 | 207971-0-00 | 1 | ugello | nozzle | gicleur |
| 31 | 722063-2-00 | 6 | vite | screw | vis |
| 32 | 207977-0-00 | 1 | bussolina | bush | bague |
| 33 | 701106-0-00 | 1 | anello di tenuta | retainer ring | bague d'étanchéité |
| 34 | 206748-0-00 | 1 | tappo espansione | plug | bouchon |
| 35 | 206667-0-01 | 1 | tappo decompressione | plug | bouchon |
| 36 | 733507-2-00 | 1 | dado | nut | écrou |
| 37 | 206555-0-02 | 1 | ruota | wheel | roue |
| 38 | 704813-0-00 | 1 | rondella | washer | rondelle |
| 39 | 206554-0-02 | 1 | coperchio | cover | couvercle |
| 40 | 722511-2-00 | 2 | vite | screw | vis |
| 41 | 701031-0-00 | 1 | anello di tenuta | retainer ring | bague d'étanchéité |
| 42 | 729022-2-00 | 1 | vite | screw | vis |
| 43 | 208087-3-00 | 1 | indicatore livello olio | oil level gauge | indicateur niveau huile |
| 44 | 202398-0-10 | 1 | tappo | plug | bouchon |
| 45 | 207758-0-01 | 1 | bussola guida astina | bush | bague |
| 46 | 206296-0-00 | 1 | tubetto scarico olio | pipe | tube |
| 47 | 202484-0-10 | 4 | vite | screw | vis |
| 48 | 206687-2-00 | 1 | coperchio coclea | cover | couvercle |
| 49 | 206690-2-00 | 1 | ventola di raffreddamento | cooling fan | ventilateur |
| 50 | 206688-0-00 | 1 | coclea per ventola | scroll | palier |

SMP

TAV.10

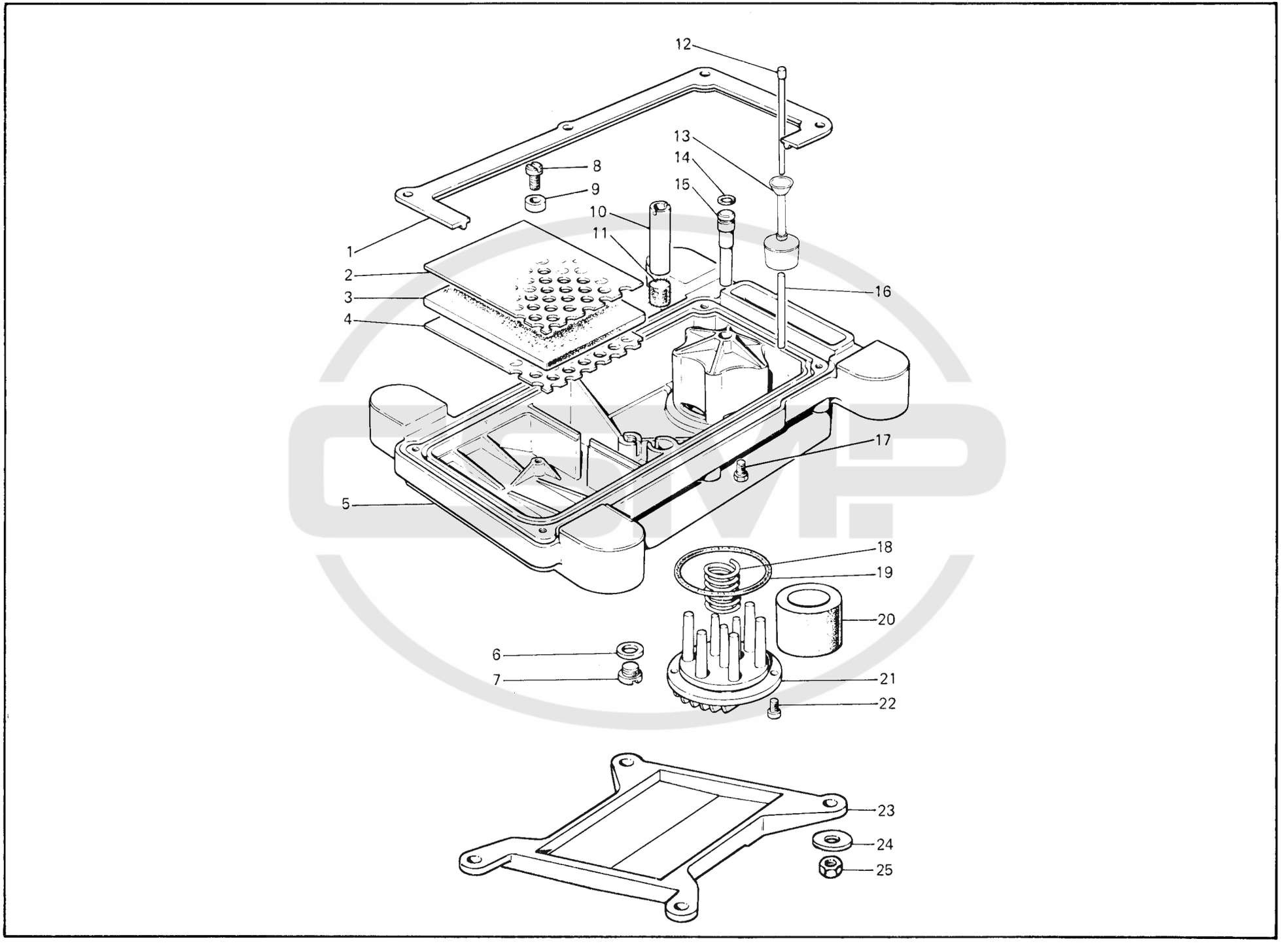

| Fig. N. Abb. N. | Part. N. Piece N. Bestell N. Pieza N. | Qt. Anzahl | DESCRIZIONE | DESCRIPTION | DESCRIPTION |
|---|---|---|---|---|---|
| 1 | 207909-0-00 | 1 | guarnizione bacinella | oil sump gasket | garniture réservoir |
| 2 | 206567-0-01 | 1 | lamiera forata superiore | upper sheet | plaque perforée supérieur |
| 3 | 206566-0-00 | 1 | filtro | filter | filtre |
| 4 | 206565-0-01 | 1 | lamiera forata inferiore | lower sheet | plaque perforée inférieur |
| 5 | 207901-0-01 | 1 | bacinella | oil sump | réservoir |
| 6 | 705977-0-00 | 1 | rondella | washer | rondelle |
| 7 | 206564-0-00 | 1 | tappo | plug | bouchon |
| 8 | 721484-2-00 | 1 | vite | screw | vis |
| 9 | 990335-0-10 | 1 | distanziale | spacer | entretoise |
| 10 | 206568-0-01 | 1 | tubetto | pipe | tube |
| 11 | 206569-0-01 | 1 | filtro | filter | filtre |
| 12 | 207975-0-00 | 1 | astina indicat. livello olio | oil sump stick | jauge niveau huile |
| 13 | 206665-2-00 | 1 | galleggiante | float | flotteur |
| 14 | 701005-0-00 | 1 | anello di tenuta | retainer ring | bague d'étanchéité |
| 15 | 206558-0-01 | 1 | tubo aspirante | pipe | tube |
| 16 | 206662-0-00 | 1 | spina | pin | goupille |
| 17 | 720411-2-00 | 1 | vite | screw | vis |
| 18 | 206545-0-00 | 1 | spirale per coperchio | spiral for cover | spirale pour couvercle |
| 19 | 701051-0-00 | 1 | guarnizione | gasket | garniture |
| 20 | 206559-0-01 | 1 | filtro | filter | filtre |
| 21 | 206560-0-10 | 1 | coperchio | cover | couvercle |
| 22 | 722063-2-00 | 2 | vite | screw | vis |
| 23 | 991218-0-00 | 1 | sottobacinella | underban | sous-réservoir |
| 24 | 704345-2-00 | 4 | rondella | washer | rondelle |
| 25 | 733008-2-00 | 4 | dado | nut | écrou |

CSMP

TAV.11

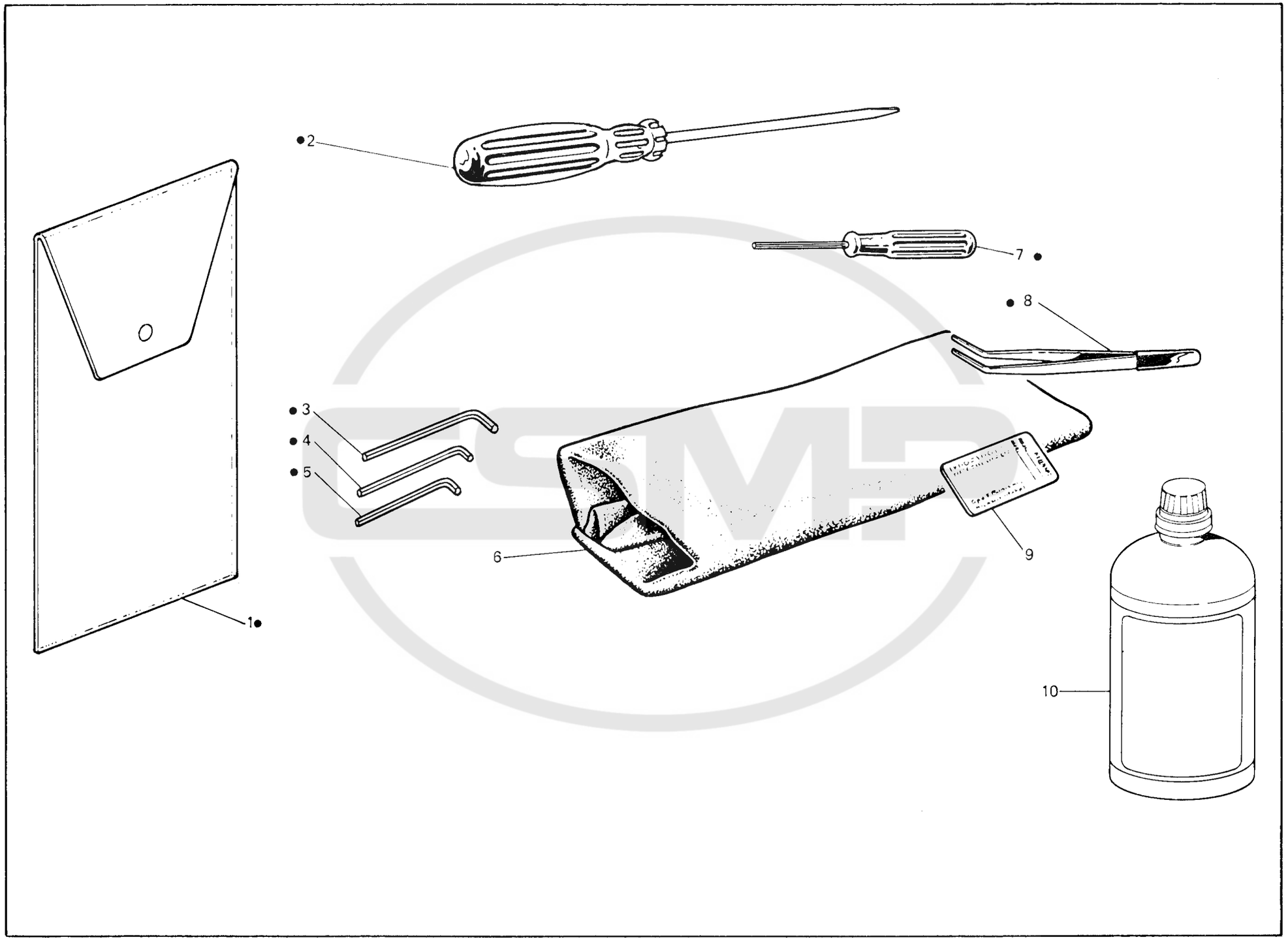

| Fig. N. Abb. N. | Part. N. Piece N. Bestell N. Pieza N. | Qt. Anzahl | DESCRIZIONE | DESCRIPTION | DESCRIPTION |
|---|---|---|---|---|---|
| ● | 991400-4-02 | 1 | busta accessori completa | accessories envelope assembly | envelope accessoires complète |
| 1 | 991415-0-00 | 1 | busta accessori | accessories envelope | envelope accessoires |
| 2 | 990723-0-00 | 1 | cacciavite medio | screw driver | tournevis moyen |
| 3 | 990639-0-10 | 1 | chiave esag. da 3 mm | 3 mm hexagonal key | clé hexagonale de 3 mm |
| 4 | 990685-0-10 | 1 | chiave esag. da 2,5 mm | 2,5 mm hexagonal key | clé hexagonale de 2,5 mm |
| 5 | 990325-0-10 | 1 | chiave esag. da 2 mm | 2 mm hexagonal key | clé hexagonale de 2 mm |
| 6 | 990918-0-00 | 1 | cuffia protezione testa | machine cover | couverture protection tête |
| 7 | 990474-0-11 | 1 | chiave esag. da 1,5 mm | 1,5 mm hexagonal key | clé hexagonale de 1,5 mm |
| 8 | 990176-0-10 | 1 | pinza per infilatura | threading clers | pince pour enfilage |
| 9 | ★ | 1 | bustina aghi | needles packet | paquette aiguilles |
| 10 | 991280-0-10 | 1 | lattina olio | oil conteiner | bidon de huile |
| | | | ★ per l'ordinazione della bustina citare lo stesso simbolo dell'ago montato sulla testa | to order packet of needles please specify symbol of needle fitted on machine | pour commander un sachet d'aiguille donner le symbol de l'aiguille montée sur la tête |

CSMP

TAV.12

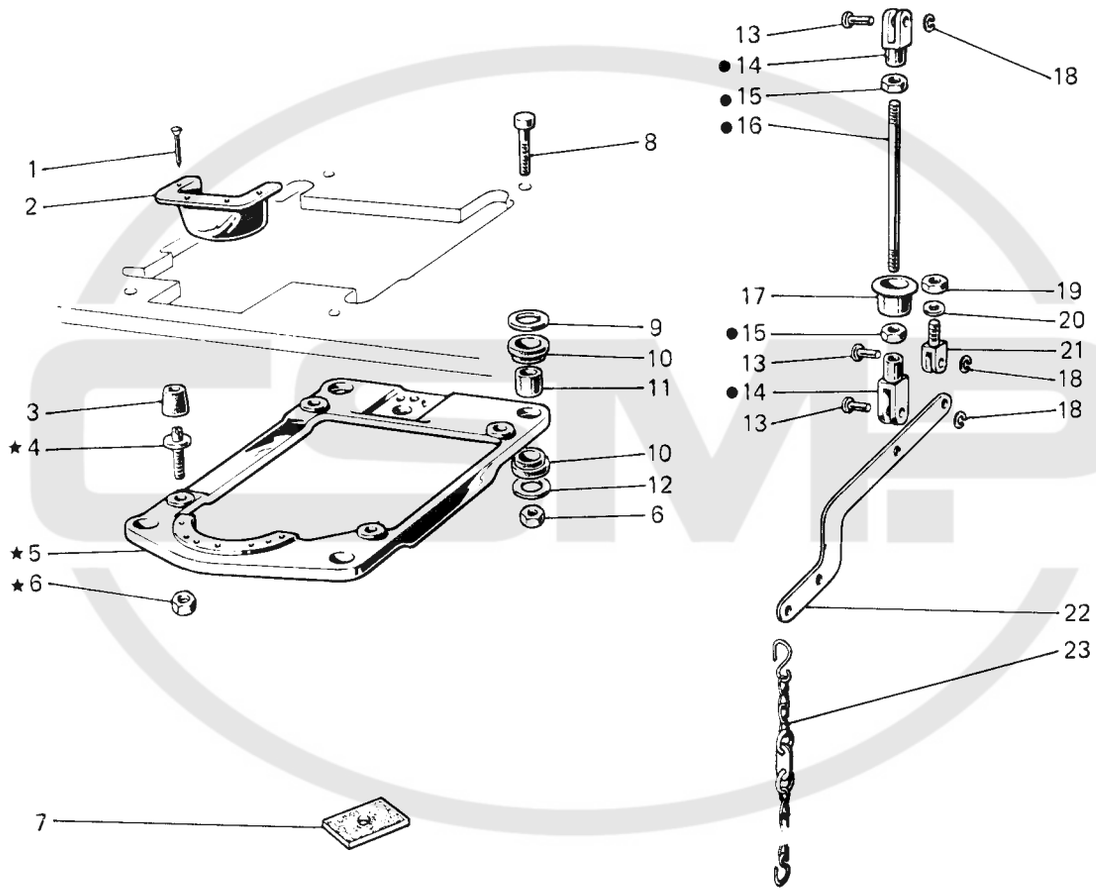
1
2
3
★4
★5
★6
7
8
9
10
11
10
12
6
13
●14
●15
●16
18
17
19
20
●15
21
13
18
●14
13
18
22
23

| Fig. N. Abb. N. | Part. N. Piece N. Bestell N. Pieza N. | Qt. Anzahl | DESCRIZIONE | DESCRIPTION | DESCRIPTION |
|---|---|---|---|---|---|
| ★ | 990987-4-00 | 1 | supporto testa completo | head support assembly | support tête complet |
| ● | 990984-4-10 | 1 | tirante alza piedino completo | presser tie-rod assembly | tirant pour soulèv. pied-presseur |
| 1 | 900201-0-10 | 4 | chiodino | rivet | clou |
| 2 | 991187-0-00 | 1 | bocchetta | cup | bouche |
| 3 | 990982-0-00 | 4 | ammortizzatore | shock absorber | amortisseur |
| 4 | 900694-0-11 | 4 | perno | pin | pivot |
| 5 | 990981-0-00 | 1 | supporto testa | head support | support tête |
| 6 | 733008-2-00 | 8 | dado | nut | écrou |
| 7 | 900203-0-10 | 4 | ammortizzatori per tavola | shock absorber | amortisseur |
| 8 | 722905-2-00 | 4 | vite | screw | vis |
| 9 | 704346-2-00 | 4 | rondella | washer | rondelle |
| 10 | 901101-0-00 | 8 | ammortizzatore | shock absorber | amortisseur |
| 11 | 901102-0-00 | 4 | distanziale | spacer | entretoise |
| 12 | 704345-2-00 | 4 | rondella | washer | rondelle |
| 13 | 990311-0-10 | 3 | perno | pin | pivot |
| 14 | 990310-0-10 | 2 | giunto | joint | joint |
| 15 | 746402-2-00 | 2 | dado | nut | écrou |
| 16 | 990452-0-00 | 1 | tirante | tie-rod | tirant |
| 17 | 900204-0-10 | 1 | bussola | bush | bague |
| 18 | 700205-0-00 | 3 | anello elastico | spring ring | anneau ressort |
| 19 | 746409-2-00 | 1 | dado | nut | écrou |
| 20 | 704424-2-00 | 1 | rondella | washer | rondelle |
| 21 | 990314-0-10 | 1 | supportino | support | support |
| 22 | 990316-0-11 | 1 | leva | lever | levier |
| 23 | 990179-4-11 | 1 | catenella completa | chain assembly | chaînette complète |

CSMP

TAV.13

202171-3-62

C07-00-1CD-01
C07-00-1CD-07

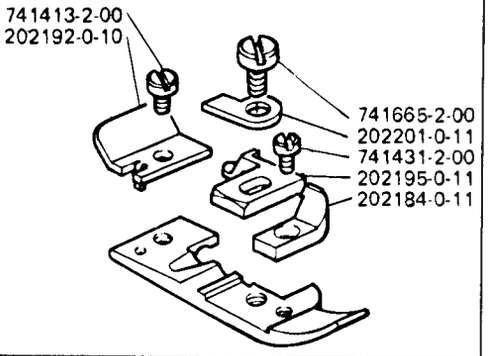


202786-3-61

C07-10-1CD-06

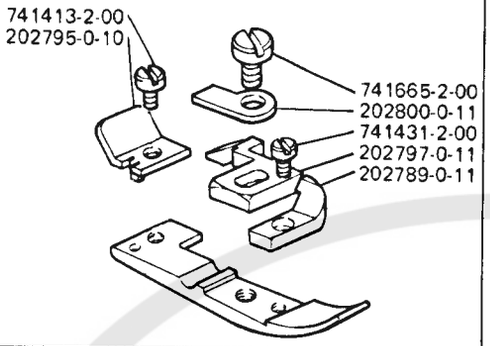


202504-0-61

C07-00-1CD-01

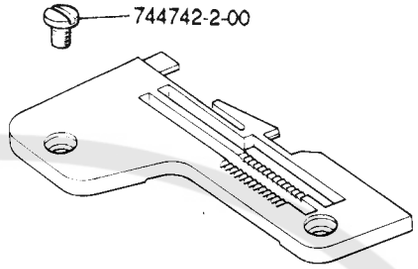


202783-0-61

C07-10-1CD-06

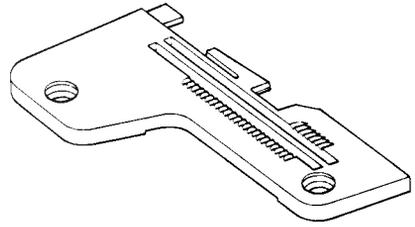

203214-0-61

C07-00-1CD-07

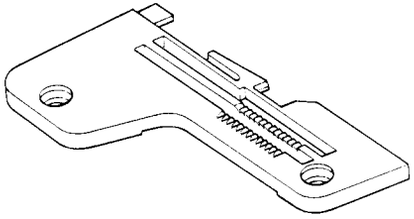

202053-0-60

C07-00-1CD-01

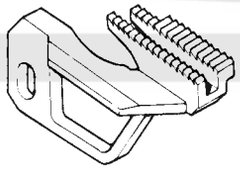

202780-0-60

C07-10-1CD-06

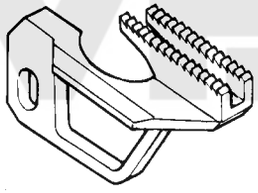

203199-0-60

C07-00-1CD-07

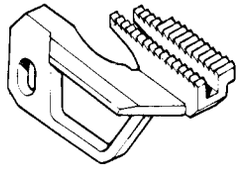

202057-0-60

C07-00-1CD-01
C07-00-1CD-07

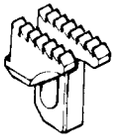

202782-0-60

C07-10-1CD-06

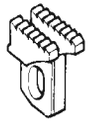

202061-0-60

C07-00-1CD-01
C07-00-1CD-07
C07-10-1CD-06

202142-0-60

C07-00-1CD-01
C07-00-1CD-07
C07-10-1CD-06

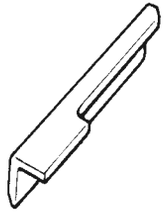

202146-0-60

C07-00-1CD-01
C07-00-1CD-07
C07-10-1CD-06

202092-0-61

C07-10-1CD-06

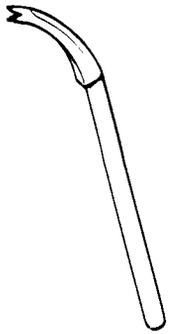

208011-0-61

C07-00-1CD-01
C07-00-1CD-07

202094-0-62

C07-00-1CD-07
C07-10-1CD-06

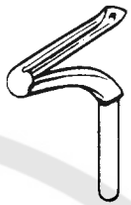

202095-0-62

C07-00-1CD-01

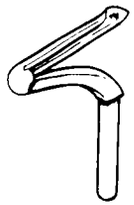

203711-4-11

C07-10-1CD-06

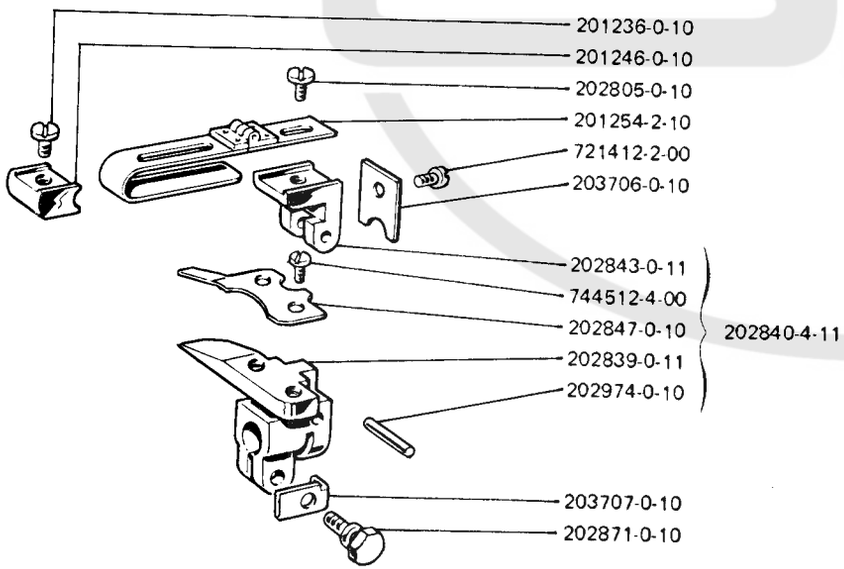


C07-10-1CD-06

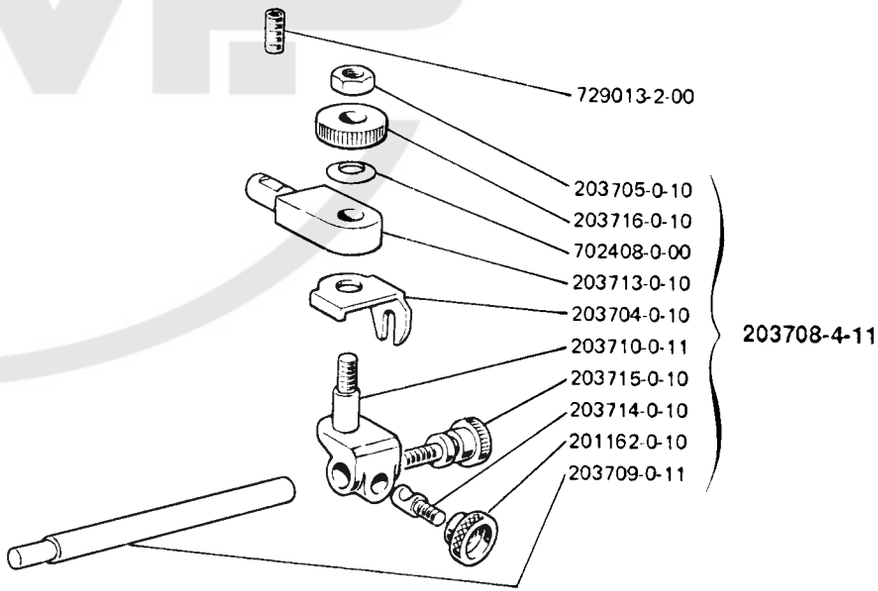

CF Italia srl Corso Colombo, 46 21013 Gallarate (VA) Italia Tel. +39 0331 75071 www.cfrimoldi.com / info@cfrimoldi.com
Rimoldi Of America, 2315 N.W. 107 Avenue-Suite M43 33172 Miami, FL USA Ph: ++1 305 477 9943 lmelocchi@rimoldiusa.com

CF Italia srl reserves the right to modify or vary, for technical or commercial reasons, the information printed in this brochure. 06/2007