# PARTS CATALOG

Cat. No. 8498⚠

May, 1989

# ETS52 SERIES

First edition; issued in July, 1984
Second edition; issued in May, 1989

初　版（1984年７月発行）
第二版（1989年５月発行）

PEGASUS®

www.collegemag.co.uk

| Cat. No. 図番△ | 版数 | 年 月 日 | 主 な 改 訂 内 容 |
|---|---|---|---|
| 8 4 9 8 △1 | 二版 | 1989. 6. 13 | 1)給油機構の変更<br>2)ETS52-186 ～188(BL装置搭載機種) を追加 |

| Cat. No. △ | Edition | Date. | Modification of the main details |
|---|---|---|---|
| 8 4 9 8 △1 | Second edition | 13. 6. 1989 | Modification of the Lubrication mechanism.<br>Addition of ETS52-186 ～188(Used for BL). |

www.college-sewing.co.uk

# パーツカタログの見方

■このパーツカタログは、1989年5月製造中のETS52のミシンを次の要領で編集しています。

■2～53頁には部品を機構別に収録し、左頁が部品の分解図、右頁がパーツリストになっています。
また、部品分解図に付されている番号は、パーツリストのREF.NO.(参照番号)を示しています。

■ゲージパーツ系列構成図・ゲージパーツ表（54～75頁）
これらの部品は、特定の形式にのみ使用されている部品で、系列構成図は54～67頁に、ゲージパーツ表は68～75頁に一括して記載しています。

■76～78頁には部品番号インデックスを記載し、部品番号だけで、その図解、名称などが容易に引き出せます。

■部品をご注文いただくときは、必らず部品番号だけを明示してください。
なお、このパーツカタログの記載事項は改良により、予告なく変更されることがありますので、あらかじめご了承ください。

# INTRODUCTION

■This parts catalog covers the ETS52 machine manufactured from May, 1989.

■On pages 2～53, each mechanism is arranged on facing pages, the first page containing the illustrations and the second page containing the data of the individual parts.
The number given to each illustration is the REF. NO. on the parts list.

■Gauge parts construction charts/gauge parts lists.
Gauge parts are used in some machine types and sewing gauges only. Pages 54～67 contain the gauge parts construction charts in order to know the illustrations and the combinations of the parts, and pages 68～75 contain the gauge parts lists to obtain the data at a glance.

■A part number index is attached to the back of this catalog for convenience.

■When placing orders for parts from this catalog, use ONLY THE PART NUMBER.

■This parts catalog is applicable to your machine and is subject to change without notification.

## 目　次


| | 頁 |
|---|---|
| アームベッド機構(1) | 2－3 |
| アームベッド機構(2) | 4－5 |
| カバー機構(1) | 6－7 |
| カバー機構(2) | 8－9 |
| クランクシャフト機構(1) | 10－11 |
| クランクシャフト機構(2) | 12－13 |
| 針振り機構(1) | 14－15 |
| 針振り機構(2) | 16－17 |
| 上ルーパー機構(1) | 18－19 |
| 上ルーパー機構(2) | 20－21 |
| 下ルーパー機構 | 22－23 |
| 送り機構(1) | 24－25 |
| 送り機構(2) | 26－27 |
| 上送り機構(1) | 28－29 |
| 上送り機構(2) | 30－31 |
| 上下メス機構 | 32－33 |
| 押エ機構 | 34－35 |
| 給油機構 | 36－37 |
| 給油機構(旧タイプ) | 38－39 |
| H.R.装置 | 40－41 |
| シャーリングアタッチメント(1)(特別注文品) | 42－43 |
| KL装置（ヒザ駆動式） | 44－45 |
| アタッチメント | 46－47 |
| 半沈床式据付付属品 | 48－49 |
| 付属品 | 50－51 |
| 糸立台 | 52－53 |
| ゲージパーツ系列構成図 | 54－67 |
| ゲージパーツ表 | 68－75 |
| 部品番号インデックス | 76－78 |


## TABLE OF CONTENTS


| | Page |
|---|---|
| Machine bed frame (1) | 2－3 |
| Machine bed frame (2) | 4－5 |
| Covers (1) | 6－7 |
| Covers (2) | 8－9 |
| Crankshaft drive mechanism (1) | 10－11 |
| Crankshaft drive mechanism (2) | 12－13 |
| Needle drive mechanism (1) | 14－15 |
| Needle drive mechanism (2) | 16－17 |
| Upper looper drive mechanism (1) | 18－19 |
| Upper looper drive mechanism (2) | 20－21 |
| Lower looper drive mechanism | 22－23 |
| Feed mechanism (1) | 24－25 |
| Feed mechanism (2) | 26－27 |
| Top feed mechanism (1) | 28－29 |
| Top feed mechanism (2) | 30－31 |
| Knife drive mechanism | 32－33 |
| Presser foot mechanism | 34－35 |
| Lubricating mechanism | 36－37 |
| Lubricating mechanism(Old type) | 38－39 |
| H.R. device | 40－41 |
| Shirring attachment (1) (option) | 42－43 |
| Attachments | 44－45 |
| KL device (manual type) | 46－47 |
| Parts for semi-submerged installation | 48－49 |
| Accessories | 50－51 |
| Thread stand | 52－53 |
| Gauge parts construction chart | 54－67 |
| Gauge parts list | 68－75 |
| Part number index | 76－78 |

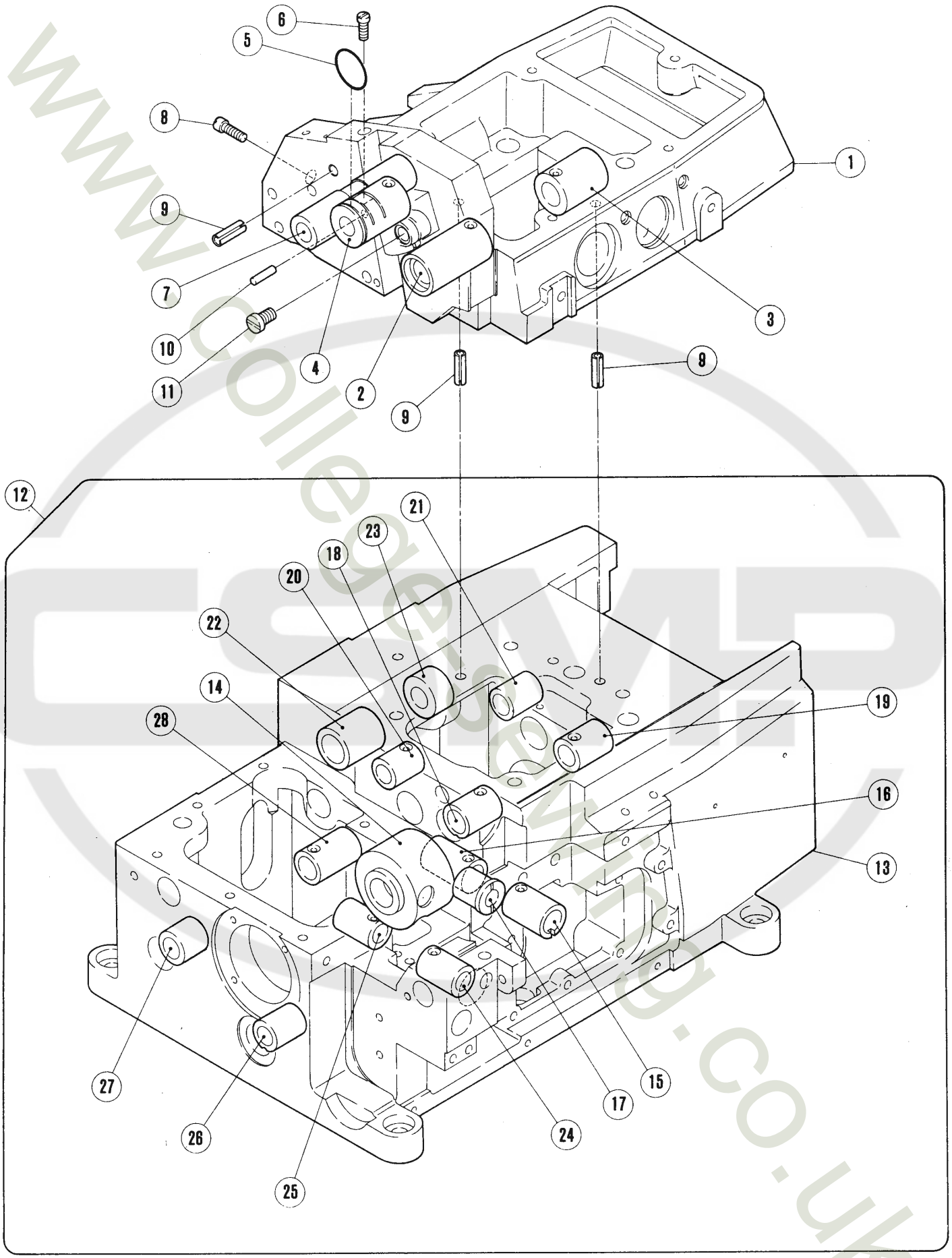


www.collegesewing.co.uk

# アームベッド機構(1)　MACHINE BED FRAME(1)

| REF. NO. | PART NO. 部品番号 | 名　称 | NAME | QT. |
|---|---|---|---|---|
| 1 | 212001-FD | アーム（右） | MACHINE ARM (RIGHT) | 1 |
| 2 | 210234 | ブッシュ | BUSHING | 1 |
| 3 | 210233 | ブッシュ | BUSHING | 1 |
| 4 | 210242 | ブッシュ | BUSHING | 1 |
| 5 | 210057 | Ｏリング | O RING | 1 |
| 6 | 2133-1 | 平ネジ／Ｃ５ | SCREW | 1 |
| 7 | 212048 | ブッシュ | BUSHING | 1 |
| 8 | 2133-1 | 平ネジ／Ｃ５ | SCREW | 1 |
| 9 | 201002 | スプリングピン | PIN | 3 |
| 10 | 211385 | 平行ピン | PIN | 1 |
| 11 | 5357 | 平ネジ／Ｃ９ | SCREW | 1 |
| 12 | 212325-FD | ベッド（組） | MACHINE BED COMPLETE | 1 |
| 13 | 212821-FD | ベッド | MACHINE BED | 1 |
| 14 | 211533 | ブッシュ | BUSHING | 1 |
| 15 | 210101 | ブッシュ | BUSHING | 1 |
| 16 | 210102 | ブッシュ | BUSHING | 1 |
| 17 | 210110 | ブッシュ | BUSHING | 1 |
| 18 | 210068 | ブッシュ | BUSHING | 1 |
| 19 | 210067 | ブッシュ | BUSHING | 1 |
| 20 | 212154 | ブッシュ | BUSHING | 1 |
| 21 | 210297 | ブッシュ | BUSHING | 1 |
| 22 | 212037 | ブッシュ | BUSHING | 1 |
| 23 | 212038 | ブッシュ | BUSHING | 1 |
| 24 | 210124 | ブッシュ | BUSHING | 1 |
| 25 | 210125 | ブッシュ | BUSHING | 1 |
| 26 | 210164 | ブッシュ | BUSHING | 1 |
| 27 | 210143 | ブッシュ | BUSHING | 1 |
| 28 | 210102 | ブッシュ | BUSHING | 1 |

www.college-sewing.co.uk

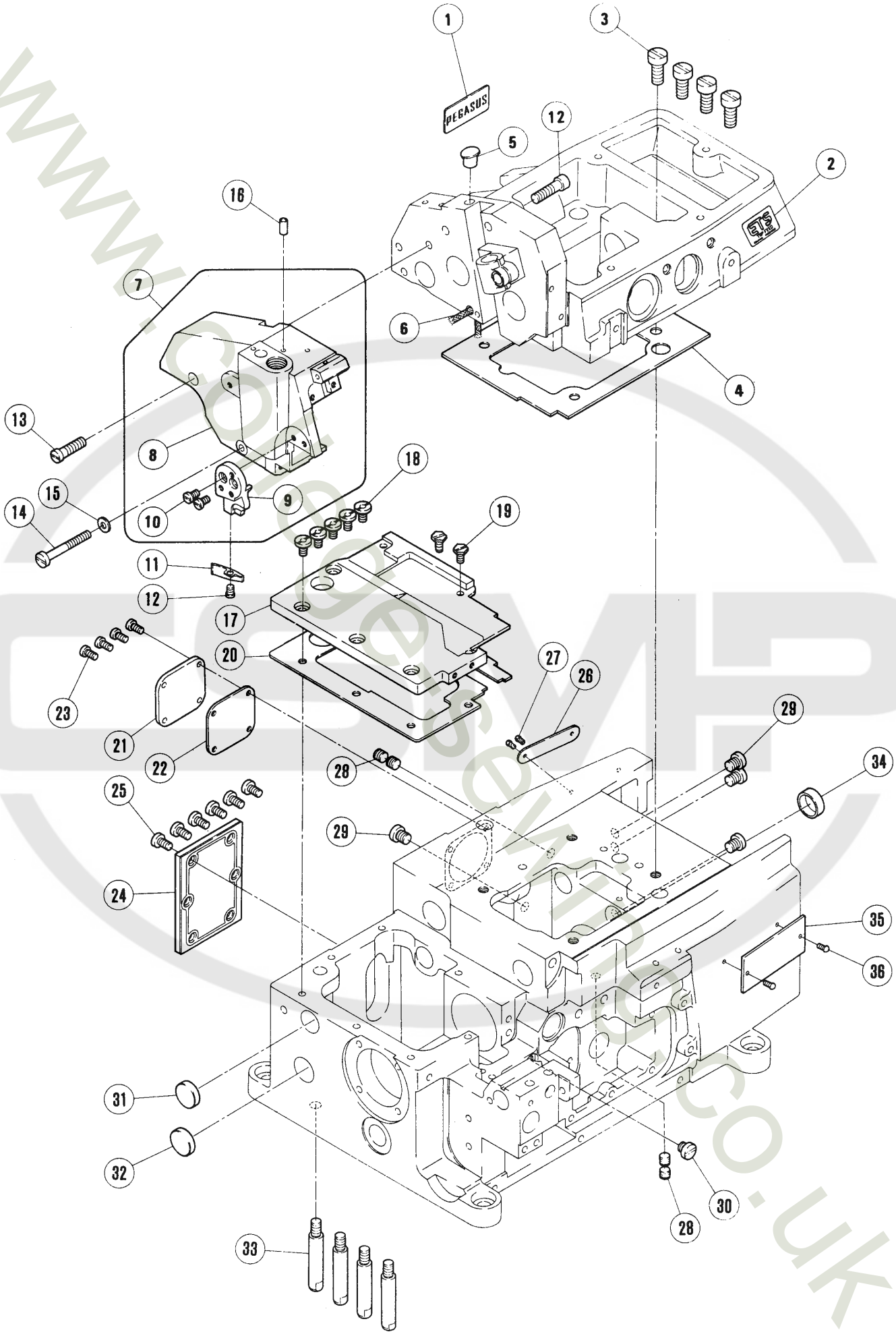


www.cogesewing.co.uk

# アームベッド機構(2)　MACHINE BED FRAME(2)

| REF. NO. | PART NO. 部品番号 | 名　称 | NAME | QT. |
|---|---|---|---|---|
| 1 | 205722A | 銘板 | NAME PLATE | 1 |
| 2 | 9A3001 | ラベル | LABEL | 1 |
| 3 | 5078 | 平ネジ／C11 | SCREW | 4 |
| 4 | 210002 | ガスケット | GASKET | 1 |
| 5 | 240052 | 栓 | PLUG | 1 |
| 6 | 202175 | 給油紐 | OIL WICK | 1 |
| 7 | 212489AFD | アーム | MACHINE ARM | 1 |
| 8 | 212004AFD | アーム（左） | MACHINE ARM (LEFT) | 1 |
| 9 | 211389-HD | アームカバー（左） | ARM COVER (LEFT) | 1 |
| 10 | 5328 | 平ネジ／C4 | SCREW | 2 |
| 11 | 212985 | カバー | COVER | 1 |
| 12 | 5053 | 平ネジ／C4 | SCREW | 1 |
| 13 | 5163 | 平ネジ／C8 | SCREW | 1 |
| 14 | 5595 | 平ネジ／C5 | SCREW | 1 |
| 15 | 200149 | ガスケット | GASKET | 1 |
| 16 | 210528 | 給油パイプ | OIL PIPE | 1 |
| 17 | 212007 | 上蓋 | BED PLATE | 1 |
| 18 | 4009-1 | 平ネジ／C5 | SCREW | 5 |
| 19 | 5482 | 六角ネジ／C5 | SCREW | 2 |
| 20 | 212008 | ガスケット | GASEKT | 1 |
| 21 | 212010-FD | 後蓋 | COVER PLATE | 1 |
| 22 | 212011 | ガスケット | GASKET | 1 |
| 23 | 5142 | 平ネジ／C4 | SCREW | 4 |
| 24 | 210005 | 送り調節蓋 | COVER PLATE | 1 |
| 25 | 5117 | 平ネジ／C5 | SCREW | 6 |
| 26 | 230047 | 機番板 | SERIAL NUMBER PLATE | 1 |
| 27 | 210679 | 止ピン | PIN | 2 |
| 28 | 2913-1 | 止ネジ／C10 | SCREW | 4 |
| 29 | 5332A | 平ネジ／C10 | SCREW | 4 |
| 30 | 5434A | 平ネジ／C10 | SCREW | 1 |
| 31 | 208173 | 栓 | PLUG | 1 |
| 32 | 210003 | 栓 | PLUG | 1 |
| 33 | 204006 | 足ピン | BED PIN | 4 |
| 34 | 210003 | 栓 | PLUG | 1 |
| 35 | 212279A | 型式板 | TYPE PLATE | 1 |
| 36 | 210679 | 止ピン | PIN | 2 |

www.college-sewing.co.uk

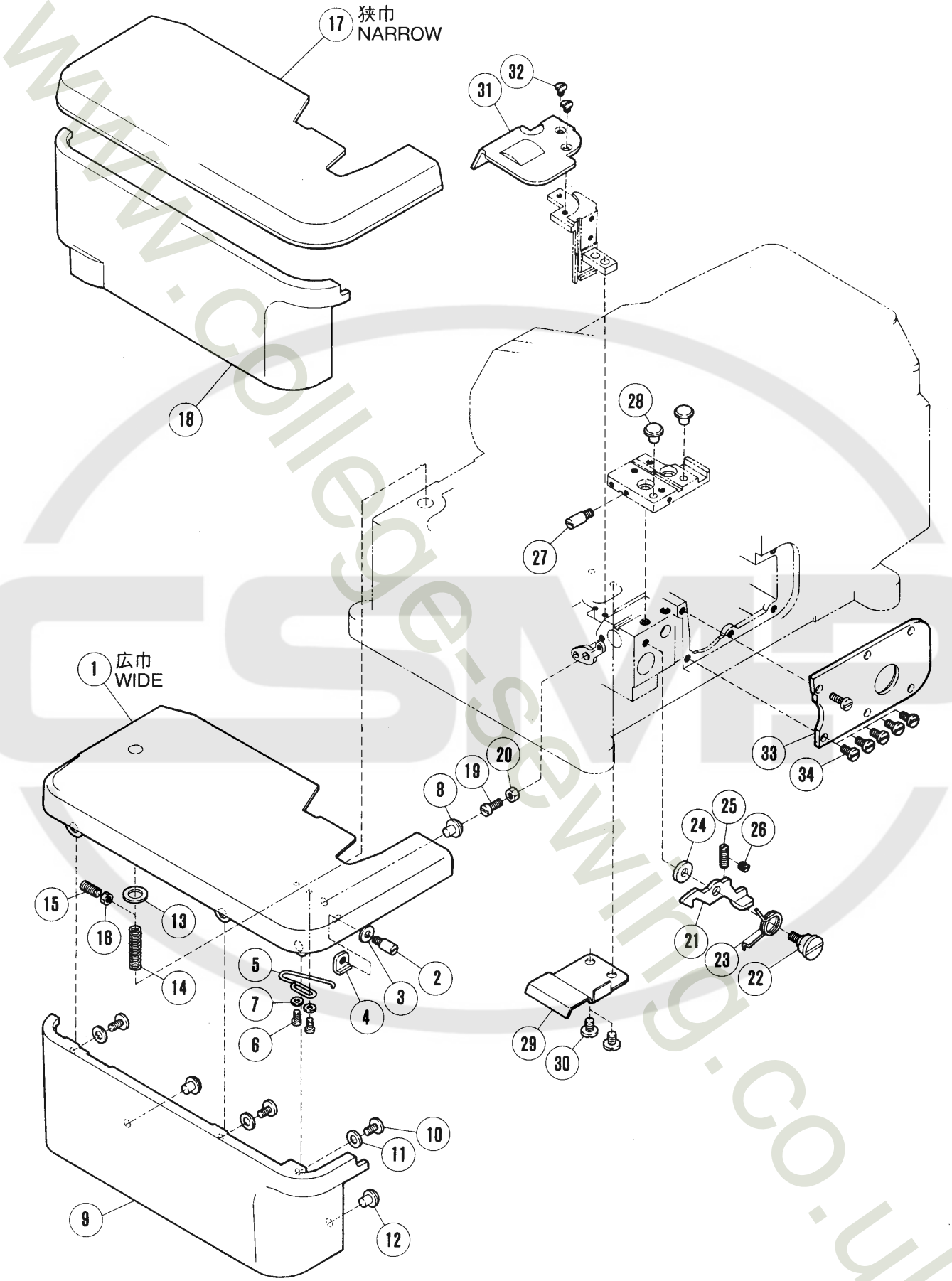


www.college-sewing.co.uk

# カバー機構(1)　COVERS(1)

| REF. NO. | PART NO. 部品番号 | 名　称 | NAME | QT. |
|---|---|---|---|---|
| 1 | 210883 | クロスプレート（広巾） | CLOTH PLATE (WIDE) | 1 |
| 2 | 210022 | ピン付ネジ／C 4 | SCREW | 1 |
| 3 | 137906 | 座金 | WASHER | 1 |
| 4 | 211300 | 四角ナット／C 4 | NUT | 1 |
| 5 | 210024 | 線細工バネ | SPRING | 1 |
| 6 | 5012 | 平ネジ／C 3 | SCREW | 2 |
| 7 | 202875 | 座金 | WASHER | 2 |
| 8 | 210025 | 振動止メ | CUSHION | 1 |
| 9 | 210027-FB | 横カバー（広巾） | SIDE COVER (WIDE) | 1 |
| 10 | 4009-1 | 平ネジ／C 5 | SCREW | 3 |
| 11 | 201185 | 座金 | WASHER | 3 |
| 12 | 210025 | 振動止メ | CUSHION | 2 |
| 13 | 210020 | 座金 | WASHER | 1 |
| 14 | 192130 | 圧縮バネ | SPRING | 1 |
| 15 | 5483 | 止ネジ／C 3 | SCREW | 1 |
| 16 | 3044 | 六角ナット／C 5 | NUT | 1 |
| 17 | 210881 | クロスプレート（狭巾） | CLOTH PLATE (NARROW) | 1 |
| 18 | 210026-FB | 横カバー（狭巾） | SIDE COVER (NARROW) | 1 |
| 19 | 1174 | 平ネジ／C 4 | SCREW | 1 |
| 20 | 3091 | 六角ナット／C 4 | NUT | 1 |
| 21 | 210021 | ラッチ | LATCH | 1 |
| 22 | 5488 | 段付ネジ／C 5 | SCREW | 1 |
| 23 | 210023 | ネジリバネ | SPRING | 1 |
| 24 | 208245 | 座金 | WASHER | 1 |
| 25 | 1435 | 止ネジ／C 5 | SCREW | 1 |
| 26 | 1459 | 止ネジ／C 4 | SCREW | 1 |
| 27 | 210022 | ピン付ネジ／C 4 | SCREW | 1 |
| 28 | 210025 | 振動止メ | CUSHION | 2 |
| 29 | 210007 | カバー／送リ台 | FEED BAR COVER | 1 |
| 30 | 2905 | 平ネジ／C 5 | SCREW | 2 |
| 31 | 210006 | 送リエキセンカバー | COVER/FEED ECCENTRIC | 1 |
| 32 | 5480 | 皿ネジ／C 3 | SCREW | 2 |
| 33 | 210117 | 上ルーパー台カバー | UPPER LOOPER HOLDER COVER | 1 |
| 34 | 4009-1 | 平ネジ／C 5 | SCREW | 5 |

www.college-sewing.co.uk

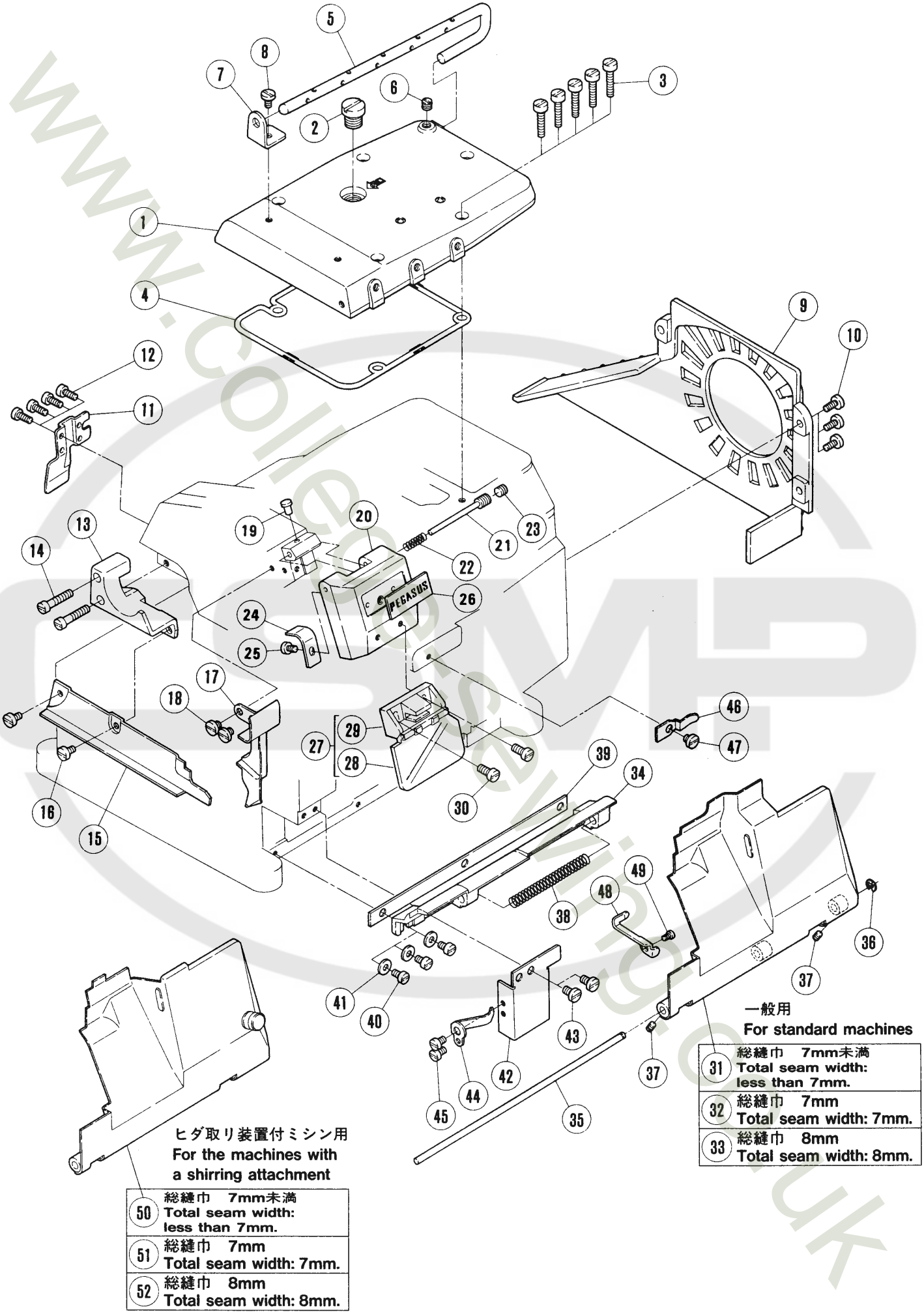


www.collectsewing.co.uk

# カバー機構(2)　COVERS(2)

| REF. NO. | PART NO. 部品番号 | 名　称 | NAME | QT. |
|---|---|---|---|---|
| 1 | 210034-HD | 上カバー | TOP COVER | 1 |
| 2 | 5198 | 平ネジ／C 1 4 | SCREW | 1 |
| 3 | 5095 | 平ネジ／C 5 | SCREW | 5 |
| 4 | 210035 | Oリング | O RING | 1 |
| 5 | 210036 | 糸道棒 | THREAD GUIDE BAR | 1 |
| 6 | 5060 | 止ネジ／C 8 | SCREW | 1 |
| 7 | 210037 | ブラケット | BRACKET | 1 |
| 8 | 4009-1 | 平ネジ／C 5 | SCREW | 1 |
| 9 | 210028-FB | ベルトカバー | BELT COVER | 1 |
| 10 | 5117 | 平ネジ／C 5 | SCREW | 3 |
| 11 | 212009 | 後カバー | REAR COVER | 1 |
| 12 | 5142 | 平ネジ／C 4 | SCREW | 4 |
| 13 | 212006 | ブラケット | BRACKET | 1 |
| 14 | 5163 | 平ネジ／C 8 | SCREW | 2 |
| 15 | 212005 | 布案内 | FABRIC GUARD | 1 |
| 16 | 2905 | 平ネジ／C 5 | SCREW | 2 |
| 17 | 212609-91 | カバー（A）／アーム左 | COVER/MACHINE ARM LEFT | 1 |
| 18 | 2905 | 平ネジ／C 5 | SCREW | 2 |
| 19 | 198192 | 当ゴム | CUSHION RUBBER | 1 |
| 20 | 211959-FD | 針糸カバー | NEEDLE THREAD COVER | 1 |
| 21 | 5589 | 段付ネジ／C 8 | SCREW | 1 |
| 22 | 211958 | 圧縮バネ | SPRING | 1 |
| 23 | 5060 | 止ネジ／C 8 | SCREW | 1 |
| 24 | 210223 | 板バネ | FLAT SPRING | 1 |
| 25 | 1216 | 平ネジ／C 4 | SCREW | 1 |
| 26 | 205722A | 銘板 | NAME PLATE | 1 |
| 27 | 208747 | 安全カバー（組） | EYE GUARD COMPLETE | 1 |
| 28 | 205685 | アイガード | EYE GUARD | 1 |
| 29 | 208744 | 安全カバー取付台（組） | EYE GUARD BRACKET COMPLETE | 1 |
| 30 | 1175-3 | 平ネジ／C 4 | SCREW | 2 |
| 31 | 210225 | 前カバー | FRONT COVER ASSEMBLY | 1 |
| 32 | 211702 | 前カバー | FRONT COVER/SW=7MM | 1 |
| 33 | 211794 | 前カバー | FRONT COVER | 1 |
| 34 | 210042 | ヒンジ／前カバー | HINGE/FRONT COVER | 1 |
| 35 | 208009 | 平行ピン | PIN | 1 |
| 36 | 200555 | 止メ輪 | RING | 1 |
| 37 | 5292 | 止ネジ／C 3 | SCREW | 2 |
| 38 | 210043 | 圧縮バネ | SPRING | 1 |
| 39 | 210047 | ガスケット | GASKET | 1 |
| 40 | 1202 | 平ネジ／C 4 | SCREW | 3 |
| 41 | 137906 | 座金 | WASHER | 3 |
| 42 | 210046 | 案内／前カバー | GUIDE/FRONT COVER | 1 |
| 43 | 4009-1 | 平ネジ／C 5 | SCREW | 2 |
| 44 | 210045 | 板バネ | FLAT SPRING | 1 |
| 45 | 1216 | 平ネジ／C 4 | SCREW | 2 |
| 46 | 210044 | 板バネ | FLAT SPRING | 1 |
| 47 | 2905 | 平ネジ／C 5 | SCREW | 1 |
| 48 | 211840 | ストッパー／前カバー | STOPPER/FRONT COVER | 1 |
| 49 | 5102 | 平ネジ／C 5 | SCREW | 1 |
| 50 | 211698 | 前カバー | FRONT COVER | 1 |
| 51 | 211698A | 前カバー | FRONT COVER | 1 |
| 52 | 211698B | 前カバー | FRONT COVER | 1 |

www.colleges-sewing.co.uk

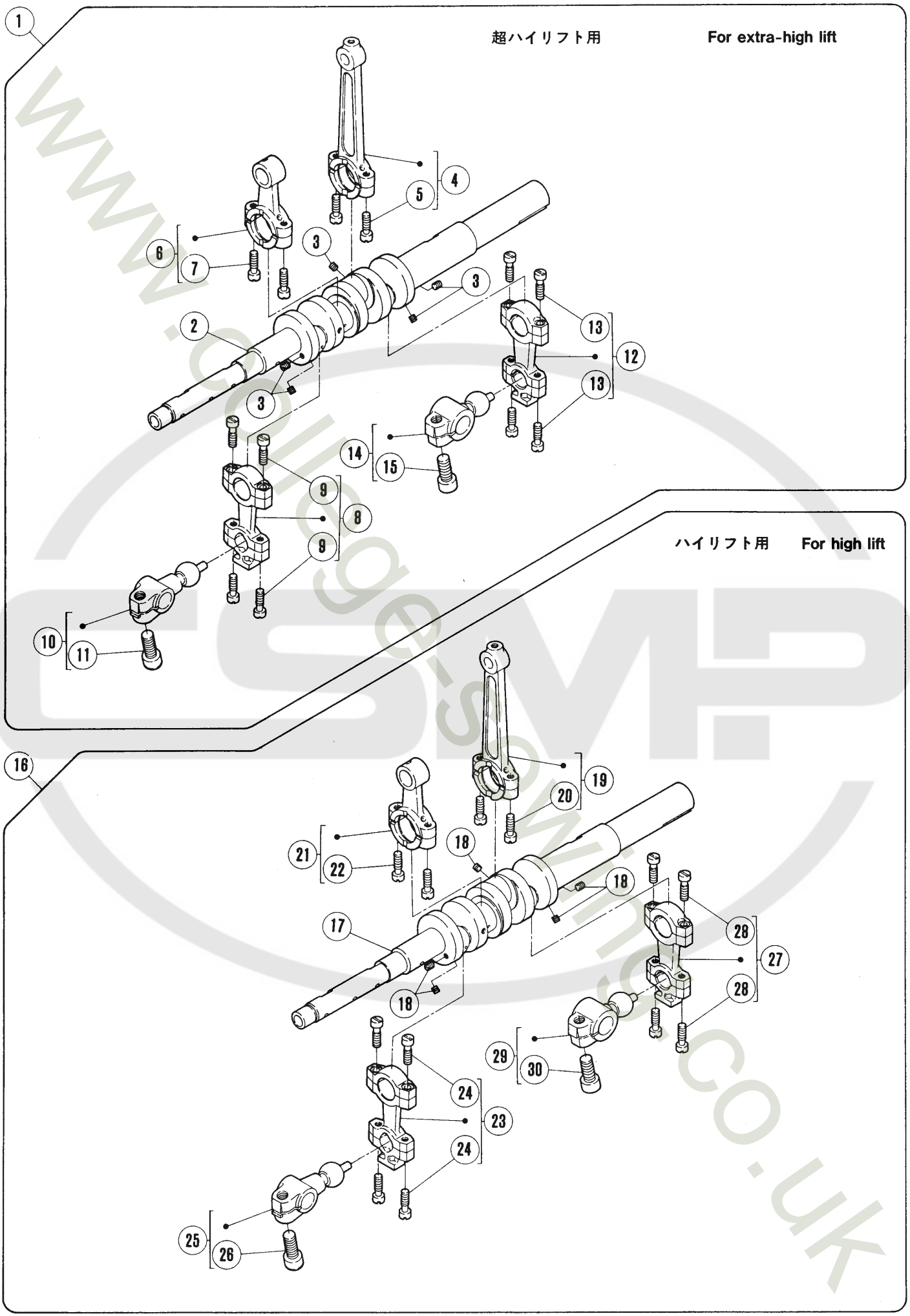


www.collegesewing.co.uk

# クランクシャフト機構(1)　CRANKSHAFT DRIVE MECHANISM(1)

| REF. NO. | PART NO. 部品番号 | 名　称 | NAME | QT. |
|---|---|---|---|---|
| 1 | 212670B | クランク軸（組） | CRANKSHAFT ASSEMBLY | 1 |
| 2 | 210228-PD | クランクシャフト | CRANKSHAFT | 1 |
| 3 | 1459 | 止ネジ／C 4 | SCREW | 5 |
| 4 | 210229 | ロッド／針振リ | CONNECTION/NEEDLE DRIVE | 1 |
| 5 | 5376 | 平ネジ／C 4 | SCREW | 2 |
| 6 | 210173 | ロッド／上メス | CONNECTION/UPPER KNIFE DRIVE | 1 |
| 7 | 5376 | 平ネジ／C 4 | SCREW | 2 |
| 8 | 210091 | ロッド | CONNECTION | 1 |
| 9 | 5376 | 平ネジ／C 4 | SCREW | 4 |
| 10 | 211652 | クランク／下ルーパー | CRANK/LOWER LOOPER HOLDER | 1 |
| 11 | 5457 | 平ネジ／C 9 | SCREW | 1 |
| 12 | 210091 | ロッド | CONNECTION | 1 |
| 13 | 5376 | 平ネジ／C 4 | SCREW | 4 |
| 14 | 210731 | クランク／上ルーパー | CRANK/UPPER LOOPER | 1 |
| 15 | 5457 | 平ネジ／C 9 | SCREW | 1 |
| 16 | 212657B | クランク軸（組） | CRANKSHAFT ASSEMBLY | 1 |
| 17 | 210228-PC | クランクシャフト | CRANKSHAFT | 1 |
| 18 | 1459 | 止ネジ／C 4 | SCREW | 5 |
| 19 | 210229 | ロッド／針振リ | CONNECTION/NEEDLE DRIVE | 1 |
| 20 | 5376 | 平ネジ／C 4 | SCREW | 2 |
| 21 | 210173 | ロッド／上メス | CONNECTION/UPPER KNIFE DRIVE | 1 |
| 22 | 5376 | 平ネジ／C 4 | SCREW | 2 |
| 23 | 210091 | ロッド | CONNECTION | 1 |
| 24 | 5376 | 平ネジ／C 4 | SCREW | 4 |
| 25 | 210734 | クランク／下ルーパー | CRANK/LOWER LOOPER DRIVE | 1 |
| 26 | 5457 | 平ネジ／C 9 | SCREW | 1 |
| 27 | 210091 | ロッド | CONNECTION | 1 |
| 28 | 5376 | 平ネジ／C 4 | SCREW | 4 |
| 29 | 210731 | クランク／上ルーパー | CRANK/UPPER LOOPER | 1 |
| 30 | 5457 | 平ネジ／C 9 | SCREW | 1 |

www.college-sewing.co.uk

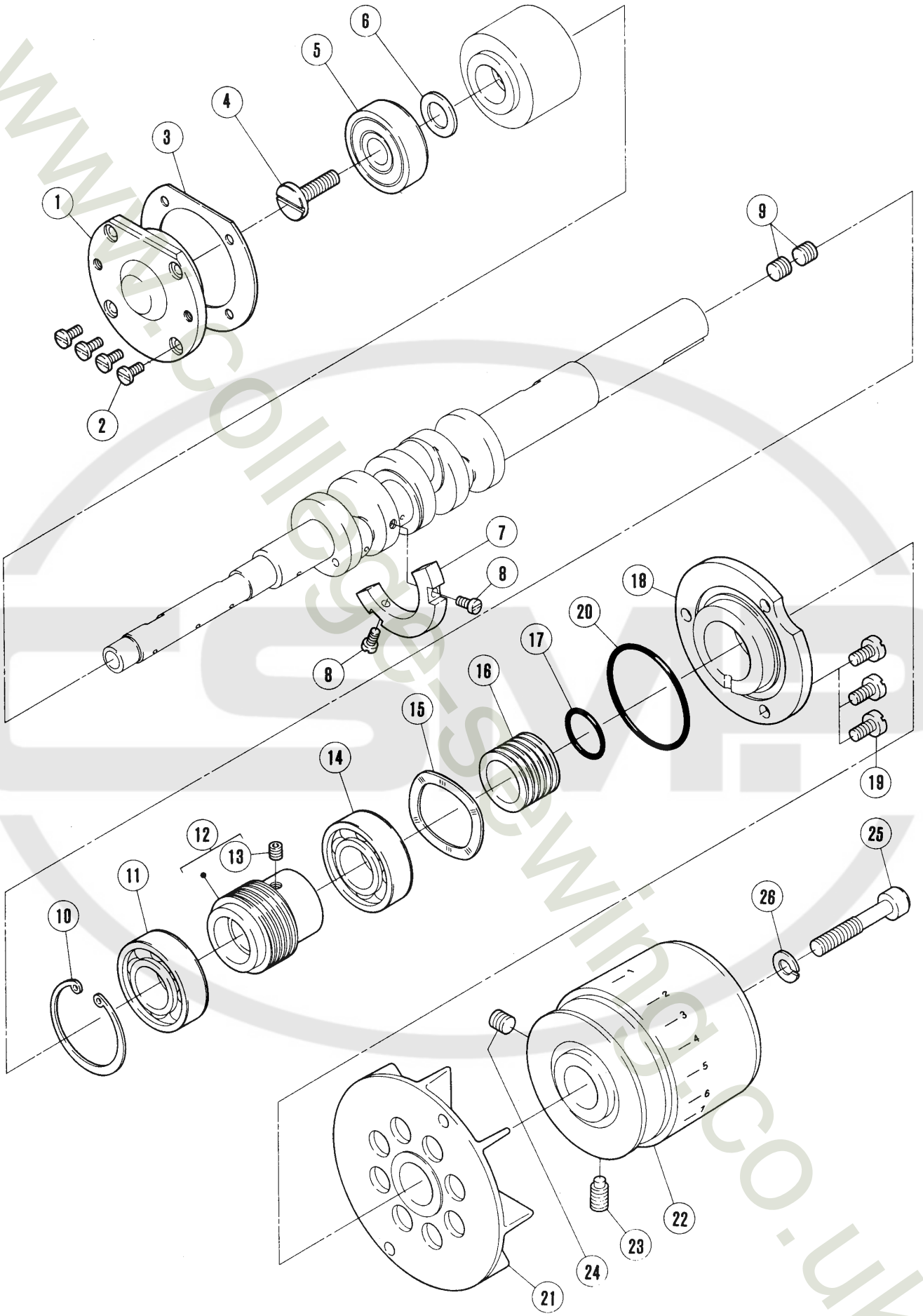


www.collegesewing.co.uk

# クランクシャフト機構(2)　CRANKSHAFT DRIVE MECHANISM(2)

| REF. NO. | PART NO. 部品番号 | 名　称 | NAME | QT. |
|---|---|---|---|---|
| 1 | 204737A | ハウジング | HOUSING | 1 |
| 2 | 5328 | 平ネジ／C 4 | SCREW | 4 |
| 3 | 204319 | ガスケット | GASKET | 1 |
| 4 | 5497 | 平ネジ／C 8 | SCREW | 1 |
| 5 | 204010 | ボールベアリング | BUSHING | 1 |
| 6 | 240102 | スペーサー | SPACER | 1 |
| 7 | 210062 | バランスウエイト | BALANCE WEIGHT | 1 |
| 8 | 5029 | 平ネジ／C 5 | SCREW | 2 |
| 9 | 1448 | 止ネジ／C 9 | SCREW | 2 |
| 10 | 211527 | 止メ輪 | RING | 1 |
| 11 | 212987 | ボールベアリング | BALL BEARING | 1 |
| 12 | 211530 | ウォーム | WORM | 1 |
| 13 | 5461 | 止ネジ／C 5 | SCREW | 1 |
| 14 | 211526 | ボールベアリング | BALL BEARING | 1 |
| 15 | 211529 | 波板座金 | WASHER | 1 |
| 16 | 210056 | 油切り | OIL SEAL | 1 |
| 17 | 210057 | Oリング | O RING | 1 |
| 18 | 211528 | ハウジング | BALL BEARING RETAINER | 1 |
| 19 | 5117 | 平ネジ／C 5 | SCREW | 3 |
| 20 | 210055 | Oリング | O RING | 1 |
| 21 | 210058 | ファン | COOLING FAN | 1 |
| 22 | 211345AHD | プーリー | MACHINE PULLEY | 1 |
| 23 | 5523 | 止ネジ／C 9 | SCREW | 1 |
| 24 | 5050 | 止ネジ／C 9 | SCREW | 1 |
| 25 | 5522 | 平ネジ／C 9 | SCREW | 1 |
| 26 | 204293 | バネ座金 | SPRING WASHER | 1 |

www.college-sewing.co.uk

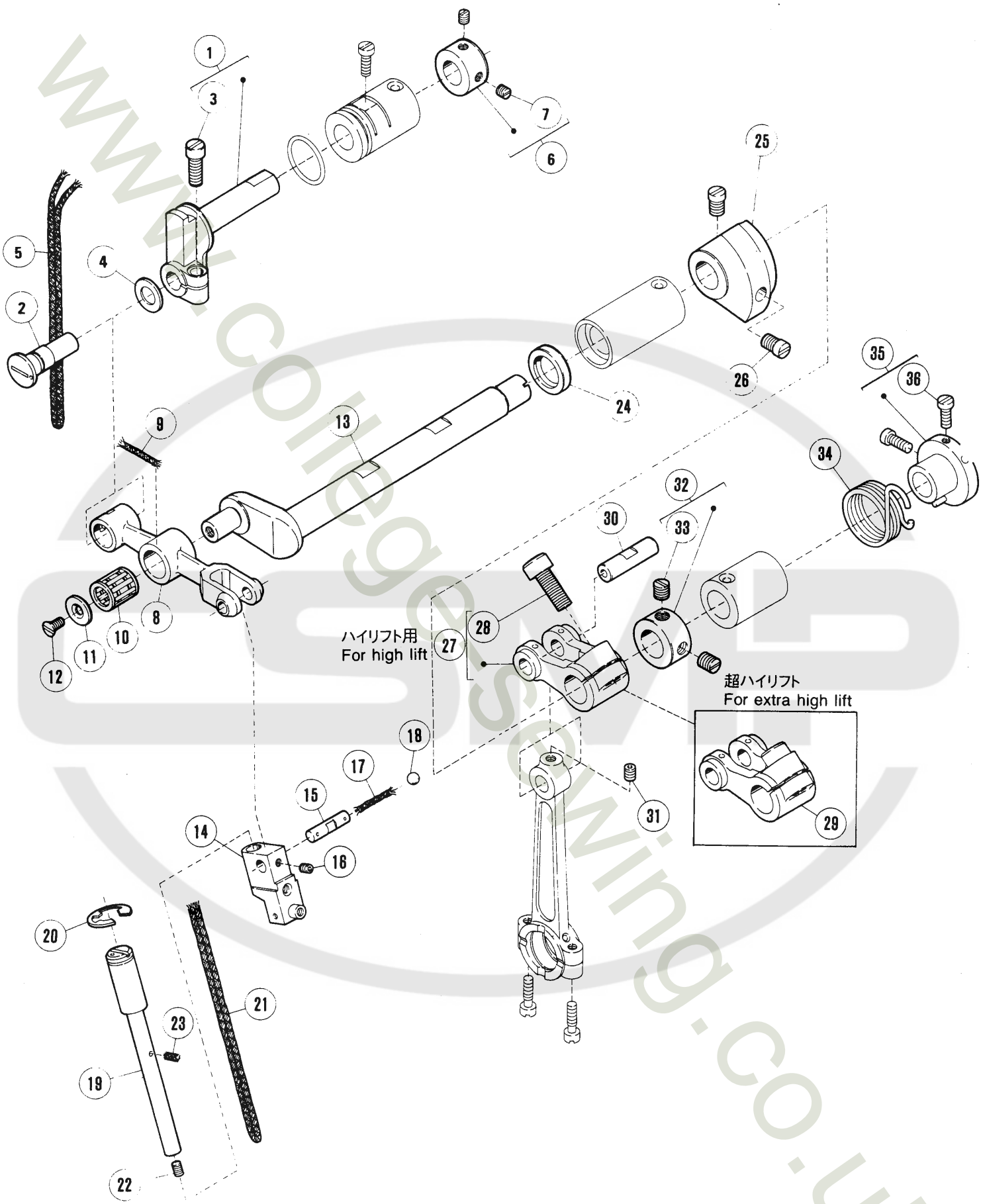


www.collegesewing.co.uk

# 針振り機構(1)　NEEDLE DRIVE MECHANISM(1)

| REF. NO. | PART NO. 部品番号 | 名　称 | NAME | QT. |
|---|---|---|---|---|
| 1 | 210239 | 針振り案内 | HOLDER | 1 |
| 2 | 210240 | エキセンピン | PIN | 1 |
| 3 | 5485 | 平ネジ／C 7 | SCREW | 1 |
| 4 | 210241 | 座金 | WASHER | 1 |
| 5 | 212186 | 給油紐 | OIL WICK | 1 |
| 6 | 201056 | カラー | COLLAR | 1 |
| 7 | 1457 | 止ネジ／C 5 | SCREW | 1 |
| 8 | 210235 | レバー／針振り | LEVER/NEEDLE DRIVE | 1 |
| 9 | 202175 | 給油紐 | OIL WICK | 1 |
| 10 | 210238 | ニードルベアリング | NEEDLE BEARING | 1 |
| 11 | 210236 | 座金 | WASHER | 1 |
| 12 | 5022 | 皿ネジ／C 3 | SCREW | 1 |
| 13 | 210232 | 軸／針振り | SHAFT/NEEDLE DRIVE | 1 |
| 14 | 212412A | 針留案内 | NEEDLE HOLDER GUIDE | 1 |
| 15 | 210237A | 平行ピン | PIN | 1 |
| 16 | 5292 | 止ネジ／C 3 | SCREW | 1 |
| 17 | 202174 | 給油紐 | OIL WICK | 1 |
| 18 | 240148 | 栓 | PLUG | 1 |
| 19 | 212413 | 軸／針留案内 | SHAFT | 1 |
| 20 | 202577 | 止メ輪 | RING | 1 |
| 21 | 202175 | 給油紐 | OIL WICK | 1 |
| 22 | 5292 | 止ネジ／C 3 | SCREW | 1 |
| 23 | 202174 | 給油紐 | OIL WICK | 1 |
| 24 | 210069 | オイルシール | OIL SEAL | 1 |
| 25 | 210511 | バランスウエイト | BALANCE WEIGHT | 1 |
| 26 | 5059 | 平ネジ／C 8 | SCREW | 2 |
| 27 | 210231 | クランク／針 | CRANK/NEEDLE DRIVE | 1 |
| 28 | 5457 | 平ネジ／C 9 | SCREW | 1 |
| 29 | 211649 | 針クランク | CRANK/NEEDLE DRIVE | 1 |
| 30 | 204146 | 平行ピン | PIN | 1 |
| 31 | 5461 | 止ネジ／C 5 | SCREW | 1 |
| 32 | 201635 | カラー | COLLAR | 1 |
| 33 | 5060 | 止ネジ／C 8 | SCREW | 2 |
| 34 | 212785 | ネジリバネ | SPRING | 1 |
| 35 | 212786-91 | カラー | COLLAR | 1 |
| 36 | 1174 | 平ネジ／C 4 | SCREW | 2 |

www.college-sewing.co.uk

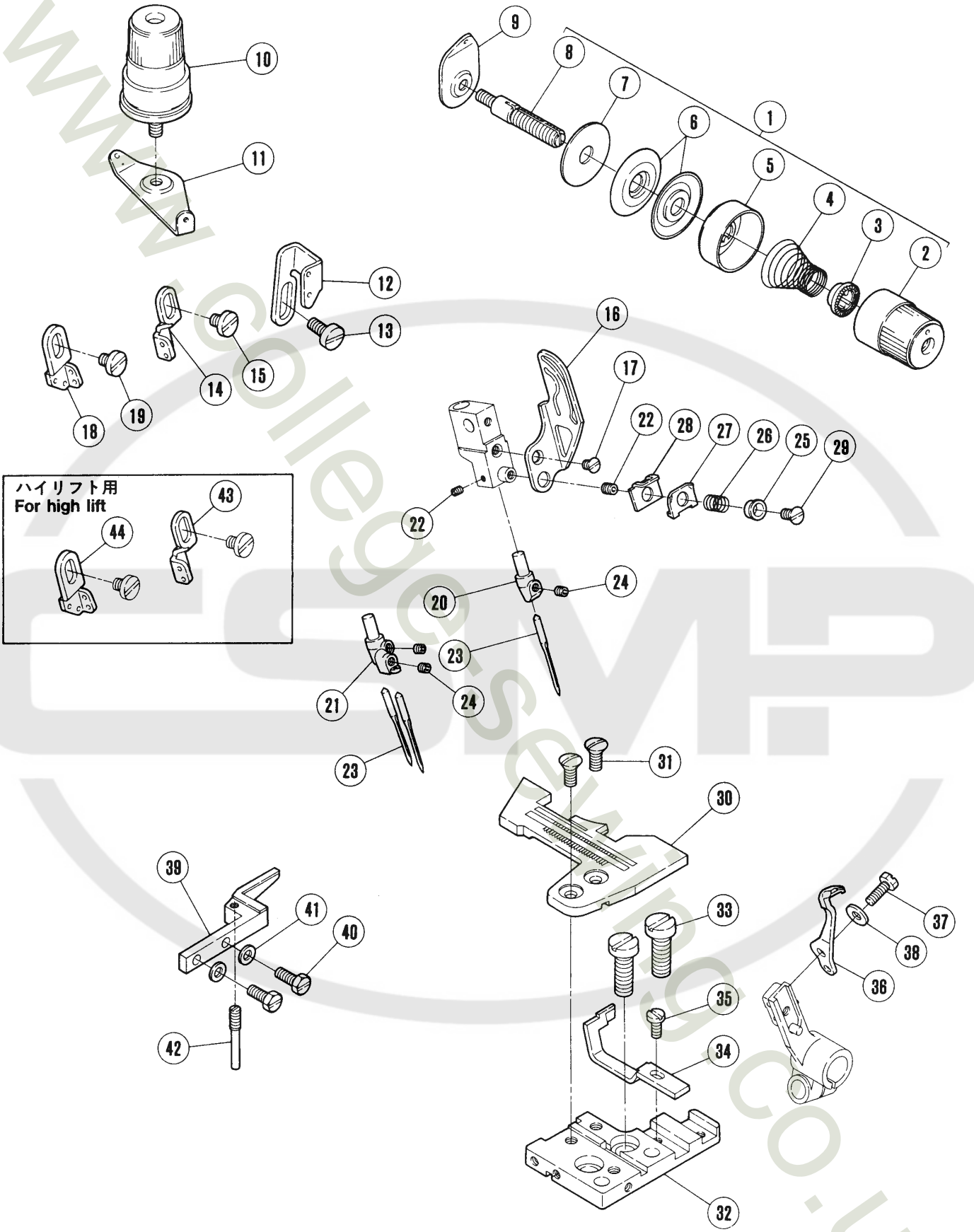


www.collegesewing.co.uk

# 針振り機構(2)　NEEDLE DRIVE MECHANISM(2)

| REF. NO. | PART NO. 部品番号 | 名　称 | NAME | QT. |
|---|---|---|---|---|
| 1 | 210529 | 糸調子（組） | THREAD TENSION COMPLETE | 1 |
| 2 | 208447 | 調子ナット | POST NUT | 1 |
| 3 | 208448 | ラチェット | SPRING BUSHING | 1 |
| 4 | 201037 | 圧縮バネ（強） | SPRING (HEAVY) | 1 |
| 5 | 208450 | 受皿 | CUP | 1 |
| 6 | 210319 | 調子皿 | TENSION DISC | 2 |
| 7 | 208449 | フェルト | FELT | 1 |
| 8 | 5082A | 調子棒／C 5 | SCREW STUD | 1 |
| 9 | 202849 | 調子台 | TENSION GUIDE | 1 |
| 10 | 210529 | 糸調子（組） | THREAD TENSION COMPLETE | 1 |
| 11 | 210090 | 調子台 | TENSION GUIDE | 1 |
| 12 | 210264 | 糸道／針糸（右） | THREAD GUIDE | 1 |
| 13 | 5117 | 平ネジ／C 5 | SCREW | 1 |
| 14 | 212723A | 糸道／針糸（右） | NEEDLE/THREAD GUIDE(RIGHT) | 1 |
| 15 | 5535 | 平ネジ／C 5 | SCREW | 1 |
| 16 | 212721 | 糸繰り／針糸 | THREAD TAKEUP | 1 |
| 17 | 5446 | 皿ネジ／C 3 | SCREW | 1 |
| 18 | 212722A | 糸道／針糸（左） | NEEDLE/THREAD GUIDE(LEFT) | 1 |
| 19 | 5535 | 平ネジ／C 5 | SCREW | 1 |
| 20 | 211358 | 針留 | NEEDLE HOLDER | 1 |
| 21 | XXXXXX | 針留 | NEEDLE HOLDER | 1 |
| 22 | 5292 | 止ネジ／C 3 | SCREW | 2 |
| 23 | XXXXXX | 針 | NEEDLE | |
| 24 | 5292 | 止ネジ／C 3 | SCREW | |
| 25 | 210750 | 案内 | GUIDE | 1 |
| 26 | 210751 | 圧縮バネ | SPRING | 1 |
| 27 | 212504 | 小調子皿 | TENSION DISC | 1 |
| 28 | 212503 | 小調子台 | BRACKET | 1 |
| 29 | 5022 | 皿ネジ／C 3 | SCREW | 1 |
| 30 | XXXXXX | 針板 | NEEDLE PLATE | 1 |
| 31 | 5484-HC | 皿ネジ／C 5 | SCREW | 2 |
| 32 | 211392 | 針板ブラケット（組） | BRACKET COMPLETE | 1 |
| 33 | 5357 | 平ネジ／C 9 | SCREW | 2 |
| 34 | XXXXXX | 針受（前） | NEEDLE GUARD (FRONT) | 1 |
| 35 | 5328 | 平ネジ／C 4 | SCREW | 1 |
| 36 | 210724 | 針受（後） | NEEDLE GUARD (REAR) | 1 |
| 37 | 5501 | 六角ネジ／C 4 | SCREW | 1 |
| 38 | 210930 | バネ座金 | SPRING WASHER | 1 |
| 39 | 210922 | 針板受（組） | SUPPORT COMPLETE/NEEDLE PLATE | 1 |
| 40 | 5501 | 六角ネジ／C 4 | SCREW | 2 |
| 41 | 210898 | 座金 | WASHER | 2 |
| 42 | 210923 | ピン付ネジ／C 4 | SCREW | 1 |
| 43 | 212723 | 糸道／針糸（右） | NEEDLE/THREAD GUIDE(RIGHT) | 1 |
| 44 | 212722 | 糸道／針糸（左） | NEEDLE/THREAD GUIDE(LEFT) | 1 |

××××××は、54～75頁参照。
See pages 54～75 for ××××××.

www.college-sewing.co.uk

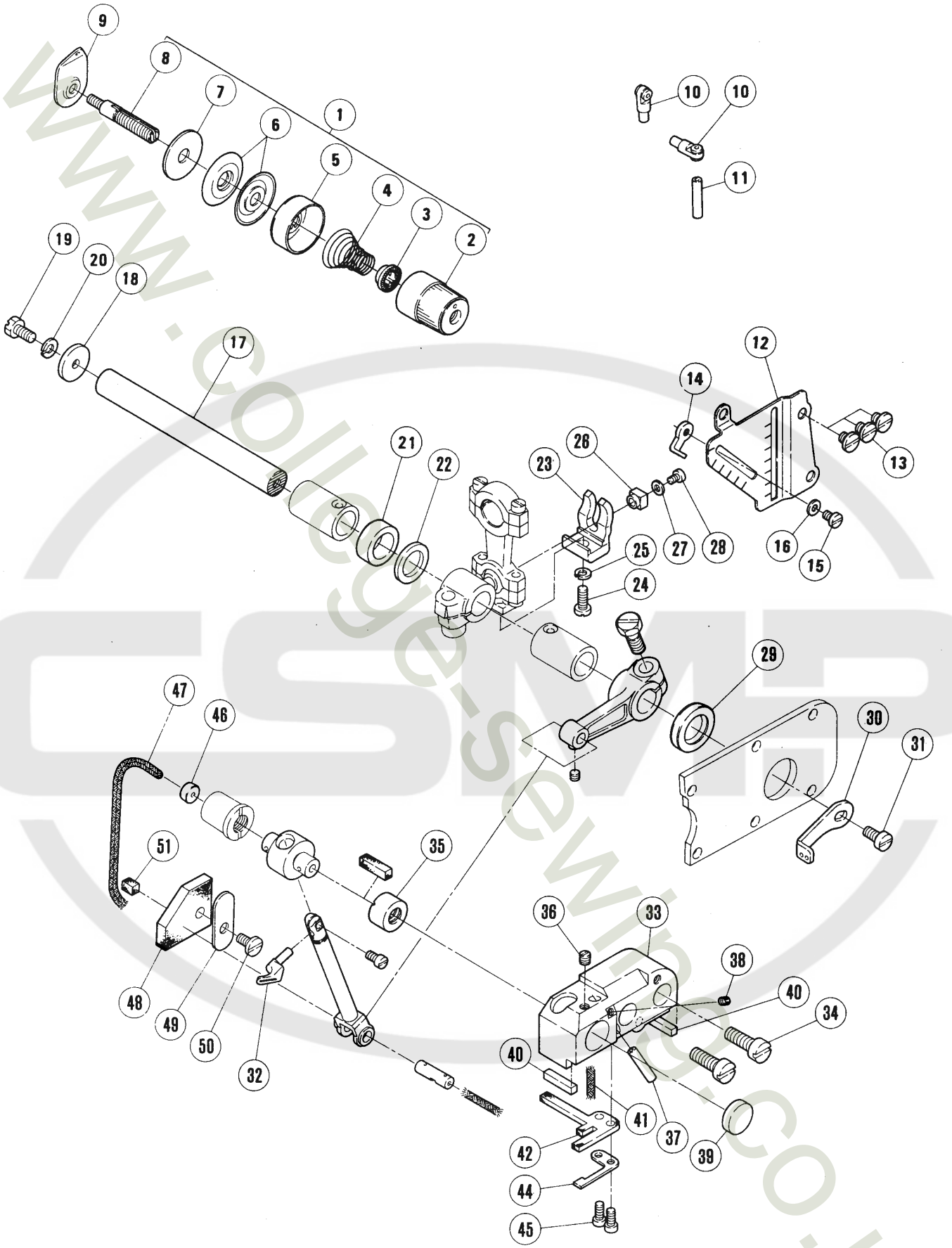


www.college-sewing.co.uk

# 上ルーパー機構(1)　UPPER LOOPER DRIVE MECHANISM(1)

| REF. NO. | PART NO. 部品番号 | 名　称 | NAME | QT. |
|---|---|---|---|---|
| 1 | 210531 | 糸調子（組） | THREAD TENSION COMPLETE | 1 |
| 2 | 208447 | 調子ナット | POST NUT | 1 |
| 3 | 208448 | ラチェット | SPRING BUSHING | 1 |
| 4 | 201068 | 圧縮バネ（弱） | SPRING (LIGHT) | 1 |
| 5 | 208450 | 受皿 | CUP | 1 |
| 6 | 210319 | 調子皿 | TENSION DISC | 2 |
| 7 | 208449 | フェルト | FELT | 1 |
| 8 | 5082A | 調子棒／C 5 | SCREW STUD | 1 |
| 9 | 202849 | 調子台 | TENSION GUIDE | 1 |
| 10 | 201439A | 糸道 | THREAD EYELET | 2 |
| 11 | 204657 | パイプ | PIPE | 1 |
| 12 | 210349 | 糸道取付板 | LOOPER THREAD GUIDE PLATE | 1 |
| 13 | 2905 | 平ネジ／C 5 | SCREW | 3 |
| 14 | 210350 | 糸道／上ルーパー | THREAD GUIDE/UPPER LOOPER | 1 |
| 15 | 5519 | 平ネジ／C 3 | SCREW | 1 |
| 16 | 202875 | 座金 | WASHER | 1 |
| 17 | 210099 | 軸／上ルーパー | SHAFT/UPPER LOOPER DRIVE | 1 |
| 18 | 210100 | 座金 | WASHER | 1 |
| 19 | 2193 | 六角ネジ／C 5 | SCREW | 1 |
| 20 | 202286 | バネ座金 | SPRING WASHER | 1 |
| 21 | 210267 | スペーサー | SPACER | 1 |
| 22 | 206180 | 座金 | WASHER | 1 |
| 23 | 210092 | 振レ止メ | GUIDE/CONNECTION | 1 |
| 24 | 5546 | 平ネジ／C 5 | SCREW | 1 |
| 25 | 202286 | バネ座金 | SPRING WASHER | 1 |
| 26 | 210093 | 角駒 | BLOCK | 1 |
| 27 | 210585 | 座金 | WASHER | 1 |
| 28 | 1231 | 平ネジ／C 1 | SCREW | 1 |
| 29 | 210103 | オイルシール | OIL SEAL | 1 |
| 30 | 212728 | 糸繰リ／上ルーパー | THREAD TAKEUP/UPPER LOOPER | 1 |
| 31 | 2902 | 平ネジ／C 5 | SCREW | 1 |
| 32 | XXXXXX | 上ルーパー | UPPER LOOPER | 1 |
| 33 | 211995 | 上ルーパー土台 | BASE/UPPER LOOPER HOLDER | 1 |
| 34 | 5282 | 平ネジ／C 9 | SCREW | 2 |
| 35 | 210109 | ブッシュ | BUSHING | 1 |
| 36 | 5408 | 止ネジ／C 3 | SCREW | 1 |
| 37 | 204657 | パイプ | PIPE | 1 |
| 38 | 5292 | 止ネジ／C 3 | SCREW | 1 |
| 39 | 208173 | 栓 | PLUG | 1 |
| 40 | 210118 | ガスケット | GASKET | 2 |
| 41 | 202175 | 給油紐 | OIL WICK | 1 |
| 42 | 210114 | 給油フェルト | OIL FELT | 1 |
| 44 | 210115 | 止メ板 | SET PLATE | 1 |
| 45 | 5012 | 平ネジ／C 3 | SCREW | 2 |
| 46 | 208592 | 栓 | CAP | 1 |
| 47 | 202174 | 給油紐 | OIL WICK | 1 |
| 48 | 210112A | 給油フェルト | OIL FELT | 1 |
| 49 | 210113 | 止メ板 | SET PLATE | 1 |
| 50 | 4009-1 | 平ネジ／C 5 | SCREW | 1 |
| 51 | 210721 | 給油フェルト | OIL FELT | 1 |

××××××は、54～75頁参照。
See pages 54～75 for ××××××.



www.college-sewing.co.uk

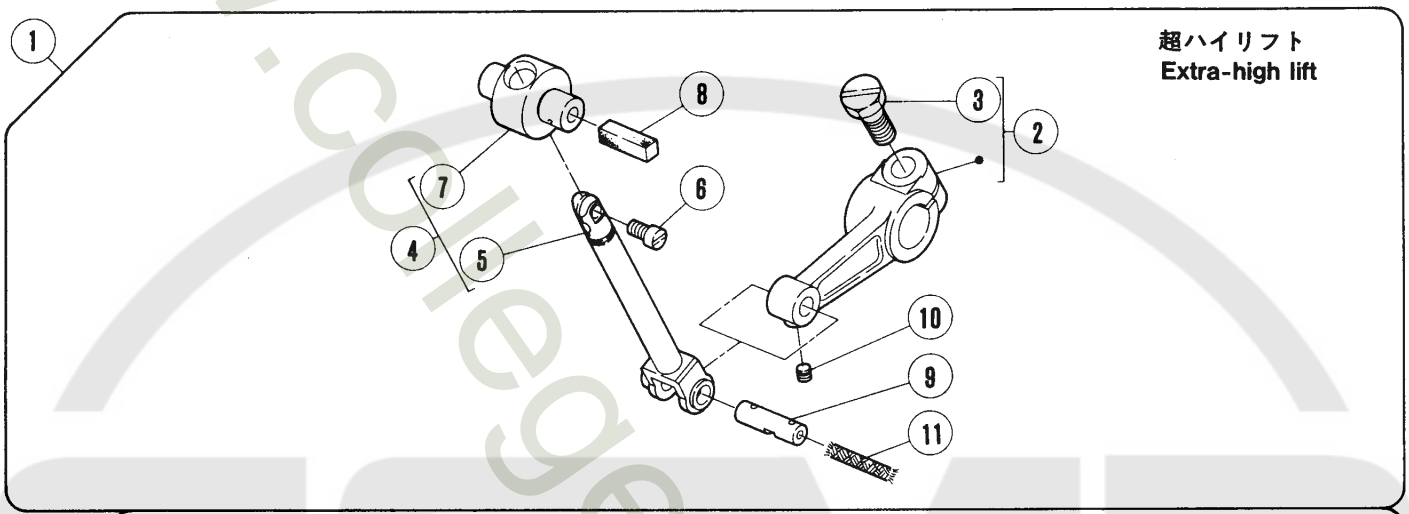


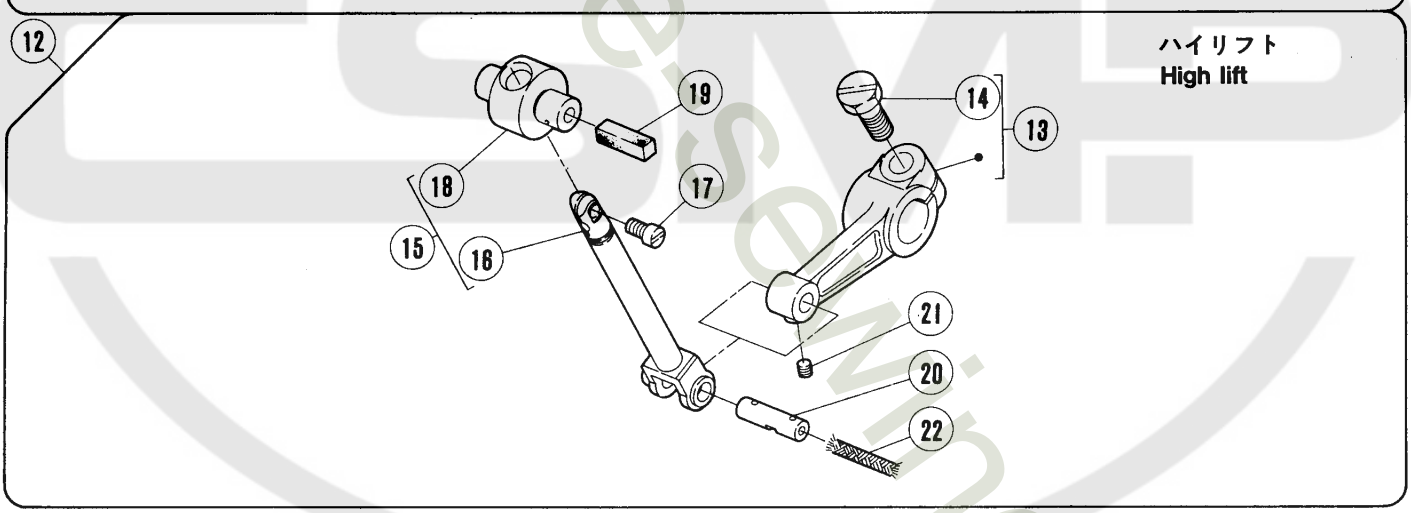


www.collegesewing.co.uk

# 上ルーパー機構(2)　UPPER LOOPER DRIVE MECHANISM(2)

| REF. NO. | PART NO. 部品番号 | 名　称 | NAME | QT. |
|---|---|---|---|---|
| 1 | 210929A91 | 上ルーパー台（組） | UPPER LOOPER HOLDER ASSEMBLY | 1 |
| 2 | 211655 | レバー／上ルーパー | LEVER/UPPER LOOPER | 1 |
| 3 | 5284 | 六角ネジ／C 9 | SCREW | 1 |
| 4 | 211926-T | 上ルーパー台（組） | UPPER LOOPER HOLDER ASSEMBLY | 1 |
| 5 | 211654-T | 上ルーパー台 | UPPER LOOPER HOLDER | 1 |
| 6 | 1998-2 | 平ネジ／C 4 | SCREW | 1 |
| 7 | 210107 | 上ルーパー台案内 | GUIDE/UPPER LOOPER HOLDER | 1 |
| 8 | 204274 | フェルト（短） | OIL WICK | 1 |
| 9 | 210105 | 平行ピン | PIN | 1 |
| 10 | 5292 | 止ネジ／C 3 | SCREW | 1 |
| 11 | 202174 | 給油紐 | OIL WICK | 1 |
| 12 | 210928A91 | 上ルーパー台（組） | UPPER LOOPER HOLDER ASSEMBLY | 1 |
| 13 | 210104 | レバー／上ルーパー | LEVER/UPPER LOOPER HOLDER | 1 |
| 14 | 5284 | 六角ネジ／C 9 | SCREW | 1 |
| 15 | 211926-T | 上ルーパー台（組） | UPPER LOOPER HOLDER ASSEMBLY | 1 |
| 16 | 211654-T | 上ルーパー台 | UPPER LOOPER HOLDER | 1 |
| 17 | 1998-2 | 平ネジ／C 4 | SCREW | 1 |
| 18 | 210107 | 上ルーパー台案内 | GUIDE/UPPER LOOPER HOLDER | 1 |
| 19 | 204274 | フェルト（短） | OIL WICK | 1 |
| 20 | 210105 | 平行ピン | PIN | 1 |
| 21 | 5292 | 止ネジ／C 3 | SCREW | 1 |
| 22 | 202174 | 給油紐 | OIL WICK | 1 |

www.college-sewing.co.uk

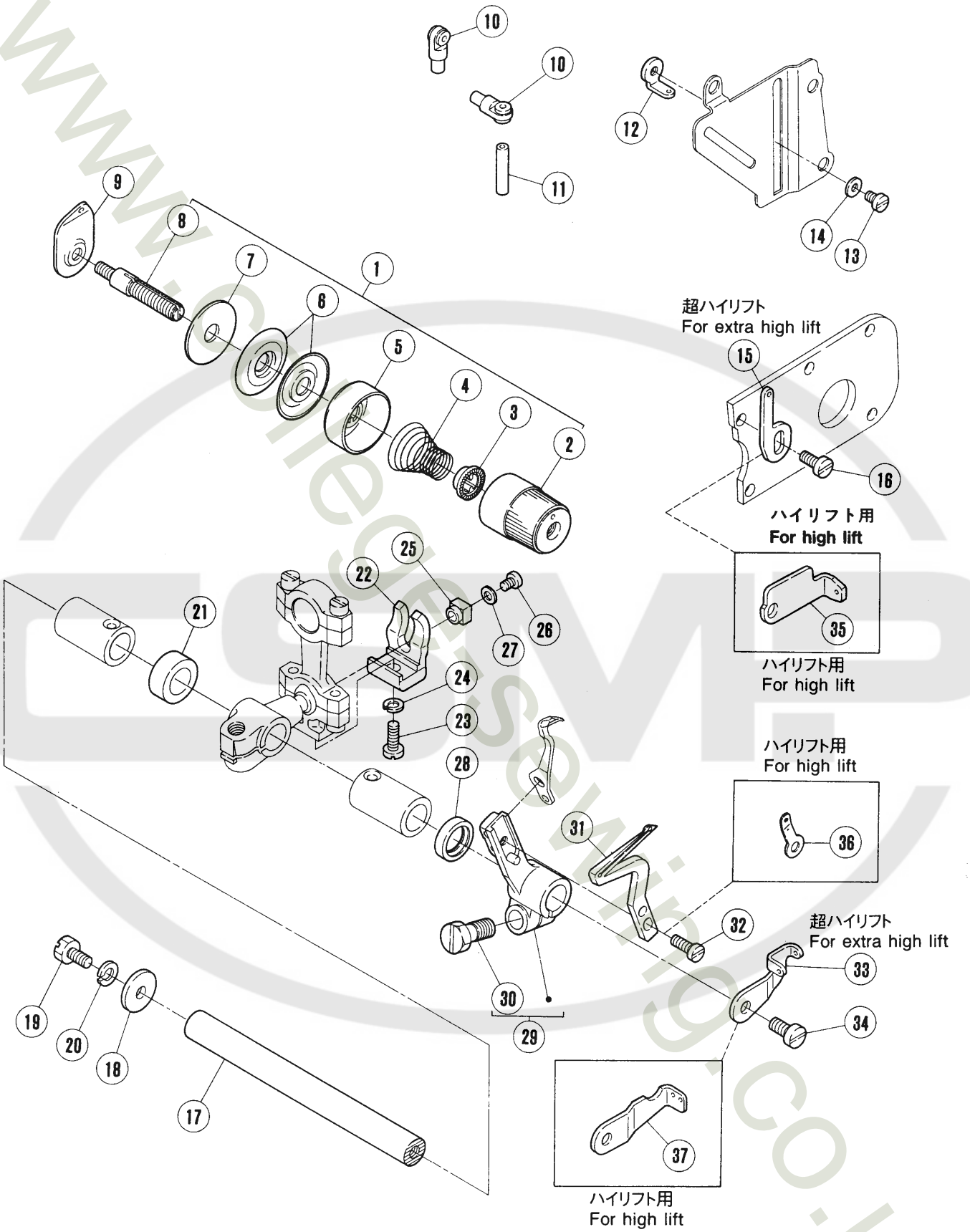


www.chiesesewing.co.uk

# 下ルーパー機構　LOWER LOOPER DRIVE MECHANISM

| REF. NO. | PART NO. 部品番号 | 名　称 | NAME | QT. |
|---|---|---|---|---|
| 1 | 210530 | 糸調子（組） | THREAD TENSION COMPLETE | 1 |
| 2 | 208447 | 調子ナット | POST NUT | 1 |
| 3 | 208448 | ラチェット | SPRING BUSHING | 1 |
| 4 | 201086 | 圧縮バネ（中） | SPRING (MEDIUM) | 1 |
| 5 | 208450 | 受皿 | CUP | 1 |
| 6 | 210319 | 調子皿 | TENSION DISC | 2 |
| 7 | 208449 | フェルト | FELT | 1 |
| 8 | 5082A | 調子棒／C 5 | SCREW STUD | 1 |
| 9 | 202849 | 調子台 | TENSION GUIDE | 1 |
| 10 | 201439A | 糸道 | THREAD EYELET | 2 |
| 11 | 204657 | パイプ | PIPE | 1 |
| 12 | 201089 | 糸道 | THREAD GUIDE (RIGHT) | 1 |
| 13 | 5519 | 平ネジ／C 3 | SCREW | 1 |
| 14 | 202875 | 座金 | WASHER | 1 |
| 15 | 212727 | 糸道 | THREAD GUIDE | 1 |
| 16 | 5441 | 平ネジ／C 5 | SCREW | 1 |
| 17 | 210123 | 軸／下ルーパー台 | SHAFT/LOWER LOOPER LEVER | 1 |
| 18 | 204107 | 座金 | WASHER | 1 |
| 19 | 2193 | 六角ネジ／C 5 | SCREW | 1 |
| 20 | 202286 | バネ座金 | SPRING WASHER | 1 |
| 21 | 210122 | スペーサー | SPACER | 1 |
| 22 | 210092 | 振レ止メ | GUIDE/CONNECTION | 1 |
| 23 | 5546 | 平ネジ／C 5 | SCREW | 1 |
| 24 | 202286 | バネ座金 | SPRING WASHER | 1 |
| 25 | 210093 | 角駒 | BLOCK | 1 |
| 26 | 1231 | 平ネジ／C 1 | SCREW | 1 |
| 27 | 210585 | 座金 | WASHER | 1 |
| 28 | 210586 | オイルシール | OIL SEAL | 1 |
| 29 | 210725 | 下ルーパー台 | LOWER LOOPER LEVER | 1 |
| 30 | 5487 | 六角ネジ／C 9 | SCREW | 1 |
| 31 | XXXXXX | 下ルーパー | LOWER LOOPER | 1 |
| 32 | 1175-2 | 平ネジ／C 4 | SCREW | 1 |
| 33 | 212726 | 糸繰リ | THREAD TAKEUP | 1 |
| 34 | 2902 | 平ネジ／C 5 | SCREW | 1 |
| 35 | 212502 | 糸道 | THREAD GUIDE | 1 |
| 36 | 210353 | 糸道 | THREAD GUIDE | 1 |
| 37 | 211401 | 糸繰リ | THREAD TAKEUP | 1 |

××××××は、54～75頁参照。
See pages 54～75 for ××××××.

www.college-sewing.co.uk

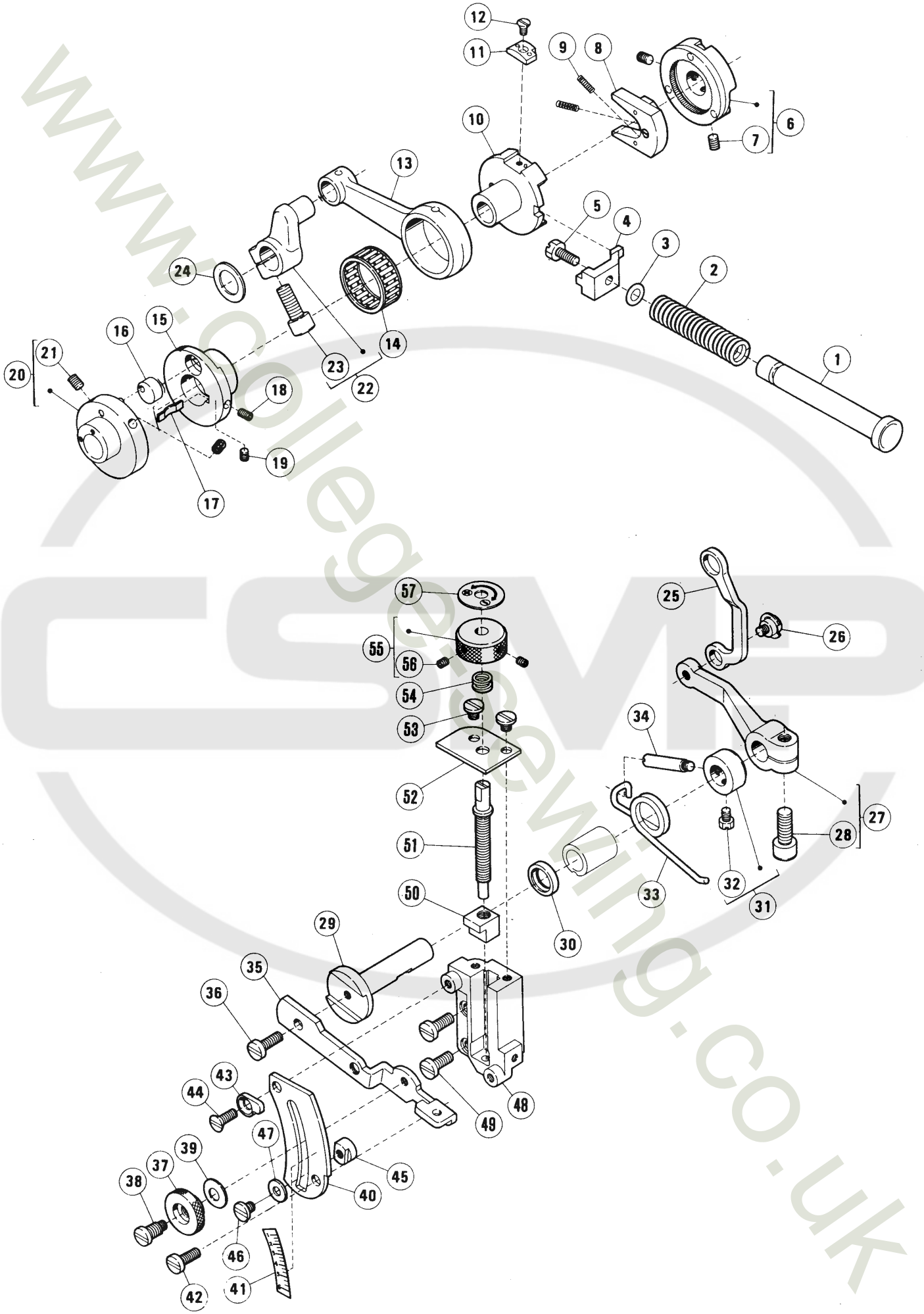


www.collegesewing.co.uk

| REF. NO. | PART NO. 部品番号 | 名称 | NAME | QT. |
|---|---|---|---|---|
| 1 | 210137 | プッシュボタン | PUSH BUTTON | 1 |
| 2 | 210139 | 圧縮バネ | SPRING | 1 |
| 3 | 204185 | Oリング | O RING | 1 |
| 4 | 210138 | ストッパー | STOPPER | 1 |
| 5 | 2193 | 六角ネジ／C 5 | SCREW | 1 |
| 6 | 210136 | ラチェットホイール（組） | RATCHET WHEEL COMPLETE | 1 |
| 7 | 5461 | 止ネジ／C 5 | SCREW | 2 |
| 8 | 208411 | エキセン調節器（爪）組 | FEED REGULATING RATCHET | 1 |
| 9 | 208415 | 圧縮バネ | SPRING | 2 |
| 10 | 211802A | エキセン／送り調節 | ECCENTRIC/FEED REGULATING | 1 |
| 11 | 211804 | ストッパー | STOPPER | 1 |
| 12 | 5437 | 皿ネジ／C 3 | SCREW | 1 |
| 13 | 210140 | 送りロッド | CONNECTION/FEED DRIVE | 1 |
| 14 | 204084 | ニードルベアリング | NEEDLE BEARING | 1 |
| 15 | 210127 | 送りエキセン | ECCENTRIC/FEED DRIVE | 1 |
| 16 | 210129 | 案内／送りエキセン | GUDE/FEED ECCENTRIC | 1 |
| 17 | 210130 | 板バネ | FLAT SPRING | 1 |
| 18 | 5427 | 止ネジ／C 3 | SCREW | 1 |
| 19 | 5292 | 止ネジ／C 3 | SCREW | 1 |
| 20 | 210128A | エキセン土台 | ECCENTRIC RETAINER | 1 |
| 21 | 5461 | 止ネジ／C 5 | SCREW | 2 |
| 22 | 210141A | クランク／送り | CRANK/FEED DRIVE | 1 |
| 23 | 5457 | 平ネジ／C 9 | SCREW | 1 |
| 24 | 208235 | 座金 | WASHER | 1 |
| 25 | 210161 | リンク／差動調節 | LINK/DIFF. FEED REGULATING | 1 |
| 26 | 5316 | 段付ネジ／C 5 | SCREW | 1 |
| 27 | 210162 | レバー／差動調節 | LEVER/DIFF. FEED REGULATING | 1 |
| 28 | 5457 | 平ネジ／C 9 | SCREW | 1 |
| 29 | 210163 | 軸／差動調節 | SHAFT/DIFF. FEED REGULATING | 1 |
| 30 | 204052A | オイルシール | OIL SEAL | 1 |
| 31 | 204754A | カラー | COLLAR | 1 |
| 32 | 5084 | 六角ネジ／C 5 | SCREW | 1 |
| 33 | 204756 | ネジリバネ | SPRING | 1 |
| 34 | 204757 | 段付ピン | PIN | 1 |
| 35 | 210166 | レバー／差動調節（左） | LEVER/DIFF. FEED REGULATING | 1 |
| 36 | 5117 | 平ネジ／C 5 | SCREW | 1 |
| 37 | 210167 | ツマミ | THUMB NUT | 1 |
| 38 | 5486 | 段付ネジ／C 5 | SCREW | 1 |
| 39 | 211301 | 皿バネ | SPRING | 1 |
| 40 | 210168 | 案内／差動調節 | REGULATING PLATE/DIFF. FEED | 1 |
| 41 | 210170 | 目盛板 | INDICATION PLATE | 1 |
| 42 | 5117 | 平ネジ／C 5 | SCREW | 1 |
| 43 | 210700 | ストッパー | STOPPER | 1 |
| 44 | 1732 | 皿ネジ／C 5 | SCREW | 1 |
| 45 | 210171 | ストッパー | STOPPER | 1 |
| 46 | 2905 | 平ネジ／C 5 | SCREW | 1 |
| 47 | 201185 | 座金 | WASHER | 1 |
| 48 | 211314 | 差動調節台 | REGULATING BASE/DIFF. FEED | 1 |
| 49 | 5118 | 平ネジ／C 5 | SCREW | 2 |
| 50 | 210535 | 角駒／差動調節 | BLOCK/DIFF. FEED REGULATING | 1 |
| 51 | 210172 | 差動調節棒 | REGULATING BAR/DIFF. FEED | 1 |
| 52 | 210534 | 案内／差動調節棒 | GUIDE/DIFF. FEED REG. BAR | 1 |
| 53 | 5091 | 平ネジ／C 5 | SCREW | 2 |
| 54 | 210533 | 圧縮バネ | SPRING | 1 |
| 55 | 210532 | ツマミ | THUMB NUT | 1 |
| 56 | 5292 | 止ネジ／C 3 | SCREW | 2 |
| 57 | 212179 | 標示板 | MARK | 1 |

www.colleges-sewing.co.uk

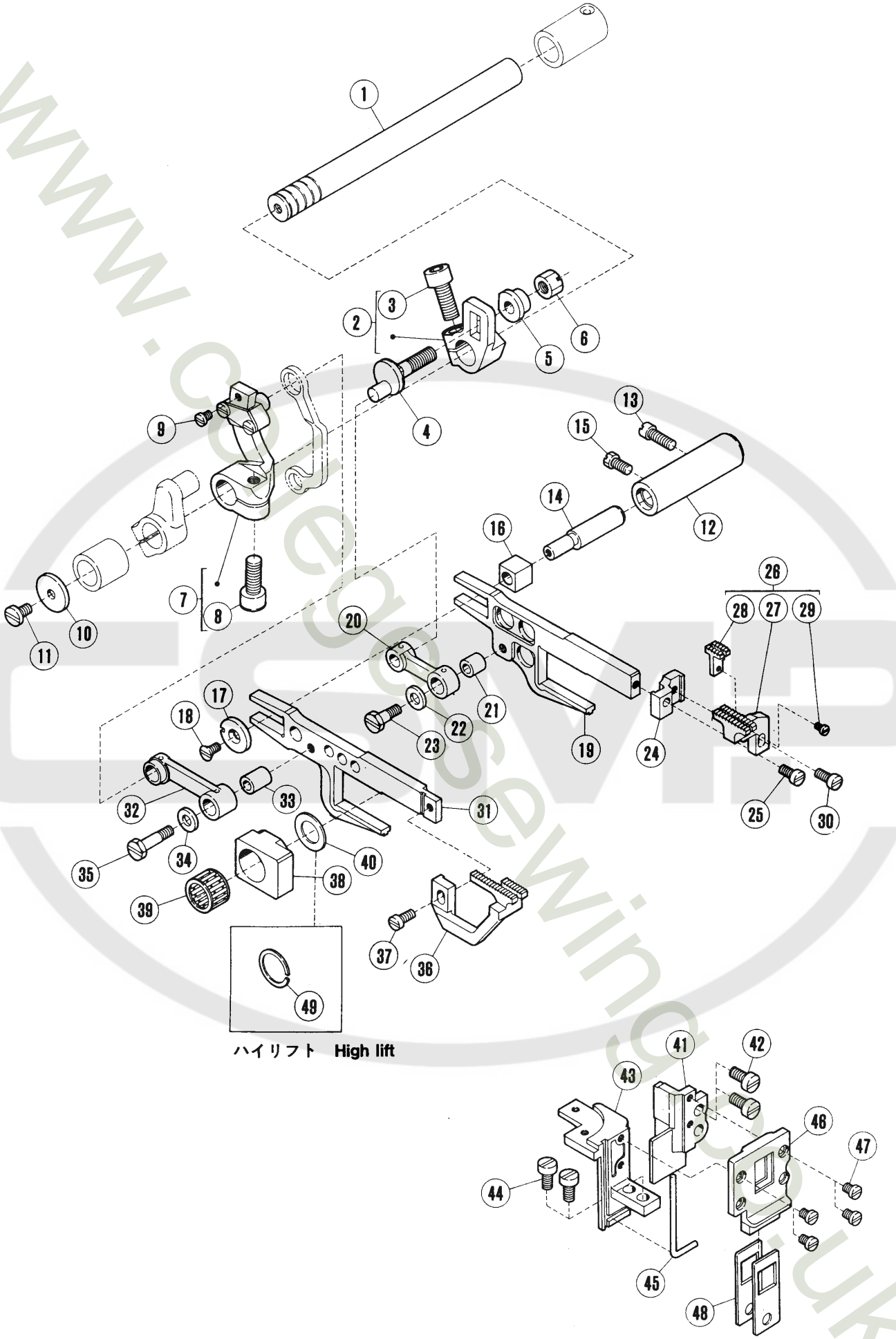


ハイリフト High lift

www.oldsewing.co.uk

| REF. NO. | PART NO. 部品番号 | 名称 | NAME | QT. |
|---|---|---|---|---|
| 1 | 212028 | 軸／送り | FEED SHAFT | 1 |
| 2 | 210144 | クランク／主送り | CRANK/MAIN FEED | 1 |
| 3 | 5457 | 平ネジ／C 9 | SCREW | 1 |
| 4 | 210145 | エキセンピン | PIN | 1 |
| 5 | 210146 | 座金 | WASHER | 1 |
| 6 | 5455 | 六角ナット／C 8 | NUT | 1 |
| 7 | 210152 | クランク（組）／差動送り | CRANK COMPLETE/DIFF. FEED | 1 |
| 8 | 5457 | 平ネジ／C 9 | SCREW | 1 |
| 9 | 5346 | 平ネジ／C 3 | SCREW | 1 |
| 10 | 210100 | 座金 | WASHER | 1 |
| 11 | 4009-1 | 平ネジ／C 5 | SCREW | 1 |
| 12 | 204129A | 送り台案内軸 | BUSHING | 1 |
| 13 | 2133-1 | 平ネジ／C 5 | SCREW | 1 |
| 14 | 204128A | 段付ピン | PIN | 1 |
| 15 | 5084 | 六角ネジ／C 5 | SCREW | 1 |
| 16 | 205418 | 角駒／送り台案内 | BLOCK/FEED BAR GUIDE | 1 |
| 17 | 204439A | 座金 | WASHER | 1 |
| 18 | 5317 | 皿ネジ／C 3 | SCREW | 1 |
| 19 | 210154 | 主送り台 | MAIN FEED BAR | 1 |
| 20 | 210147 | リンク／主送り | LINK/MAIN FEED | 1 |
| 21 | 210148 | ブッシュ | BUSHING | 1 |
| 22 | 204115 | 座金 | WASHER | 1 |
| 23 | 5489 | 六角ネジ／C 5 | SCREW | 1 |
| 24 | 210343 | ブラケット／主送り歯 | BRACKET/MAIN FEED DOG | 1 |
| 25 | 1175-2 | 平ネジ／C 4 | SCREW | 1 |
| 26 | XXXXXX | 主送り歯（組） | MAIN FEED DOG COMPLETE | 1 |
| 27 | XXXXXX | 主送り歯 | MAIN FEED DOG | 1 |
| 28 | XXXXXX | 補助送り歯 | AUXILIARY FEED DOG | 1 |
| 29 | 5492 | 平ネジ／C 1 | SCREW | 1 |
| 30 | 1175-2 | 平ネジ／C 4 | SCREW | 1 |
| 31 | 210155 | 差動送り台 | DIFFERENTIAL FEED BAR | 1 |
| 32 | 210153 | リンク／差動送り | LINK/DIFFERENTIAL FEED | 1 |
| 33 | 204114 | ブッシュ | BUSHING | 1 |
| 34 | 204115 | 座金 | WASHER | 1 |
| 35 | 5231 | 六角ネジ／C 5 | SCREW | 1 |
| 36 | XXXXXX | 差動送り歯 | DIFFERENTIAL FEED DOG | 1 |
| 37 | 1175-2 | 平ネジ／C 4 | SCREW | |
| 38 | 210156 | 角駒 | BLOCK | 1 |
| 39 | 206128 | ニードルベアリング | NEEDLE BEARING | 1 |
| 40 | 208235 | 座金 | WASHER | 1 |
| 41 | 210157 | 案内（右）／送り台 | GUIDE (RIGHT)/FEED BAR | 1 |
| 42 | 5205 | 平ネジ／C 5 | SCREW | 2 |
| 43 | 210158 | 案内（左）／送り台 | GUIDE (LEFT)/FEED BAR | 1 |
| 44 | 2902 | 平ネジ／C 5 | SCREW | 2 |
| 45 | 208168 | ガスケット | GASKET | 1 |
| 46 | 210160 | 案内／油切り | GUIDE/FEED BAR OIL SEAL | 1 |
| 47 | 5346 | 平ネジ／C 3 | SCREW | 4 |
| 48 | 210159 | 油切り／送り台 | OIL SEAL | 2 |
| 49 | 206129 | 止メ輪 | RING | 1 |

××××××は、54～75頁参照。
See pages 54～75 for ××××××.



www.collegesewing.co.uk

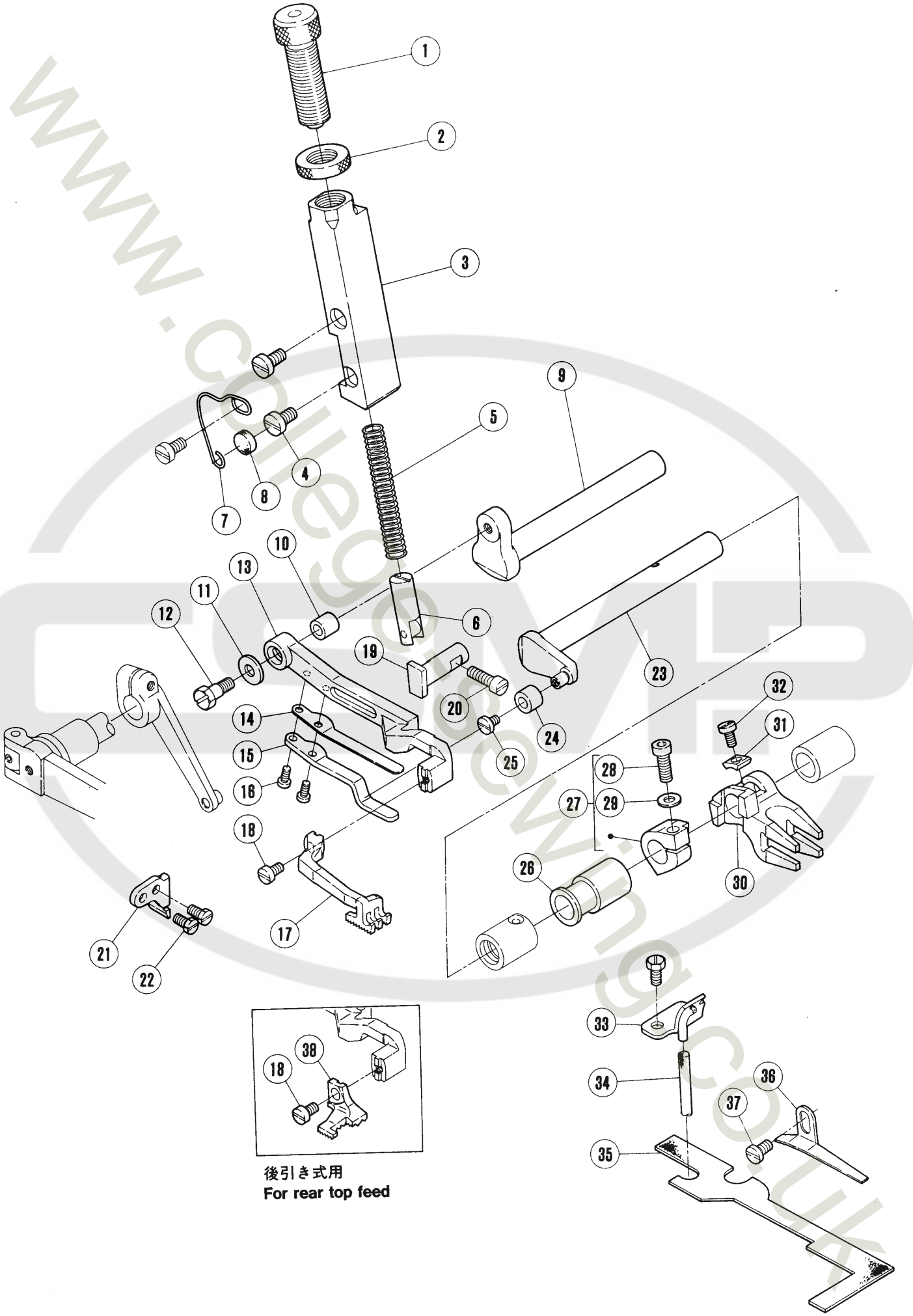


www.collegesewing.co.uk

# 上送り機構(1)　TOP FEED MECHANISM(1)

| REF. NO. | PART NO. 部品番号 | 名　称 | NAME | QT. |
|---|---|---|---|---|
| 1 | 212440 | 調節ネジ | THUMB SCREW | 1 |
| 2 | 210328 | 調節ナット | ADJUSTING SCREW NUT | 1 |
| 3 | 212025 | 押工棒案内 | PRESSER BAR GUIDE | 1 |
| 4 | 5117 | 平ネジ／C 5 | SCREW | 2 |
| 5 | 212026 | 圧縮バネ | SPRING | 1 |
| 6 | 212021 | 押工棒（組） | PRESSER BAR COMPLETE | 1 |
| 7 | 212145 | 線細工バネ | SPRING | 1 |
| 8 | 212144 | フェルト | FELT | 1 |
| 9 | 212036 | クランク軸 | SHAFT | 1 |
| 10 | 210148 | ブッシュ | BUSHING | 1 |
| 11 | 204115 | 座金 | WASHER | 1 |
| 12 | 5489 | 六角ネジ／C 5 | SCREW | 1 |
| 13 | 212400 | 上送り台 | TOP FEED BAR | 1 |
| 14 | 212448 | 当板（上） | PLATE(UPPER) | 1 |
| 15 | 212449 | 当板（下） | PLATE(LOWER) | 1 |
| 16 | 5492 | 平ネジ／C 1 | SCREW | 2 |
| 17 | XXXXXX | 上送り歯 | TOP FEED DOG | 1 |
| 18 | 1175-2 | 平ネジ／C 4 | SCREW | 1 |
| 19 | 212019 | 案内（右） | GUIDE (RIGHT) | 1 |
| 20 | 2133-1 | 平ネジ／C 5 | SCREW | 1 |
| 21 | 212020 | 案内（左） | GUIDE (LEFT) | 1 |
| 22 | 5238 | 六角ネジ／C 9 | SCREW | 2 |
| 23 | 212404 | 軸 | ROD | 1 |
| 24 | 212015 | ローラー | ROLLER | 1 |
| 25 | 5597 | 平ネジ／C 1 | SCREW | 1 |
| 26 | 212405 | スペーサー | SPACER | 1 |
| 27 | 212447 | ラッチ | LATCH | 1 |
| 28 | 5568 | 平ネジ／C 5 | SCREW | 1 |
| 29 | 307003 | 座金 | WASHER | 1 |
| 30 | 212445 | クランク | CRANK | 1 |
| 31 | 212446 | クランク案内 | CRANK GUIDE | 1 |
| 32 | 5089 | 平ネジ／C 3 | SCREW | 1 |
| 33 | 212140 | 給油パイプ（組） | OIL PIPE ASSEMBLY | 1 |
| 34 | 212143 | フェルト | FELT | 1 |
| 35 | 212146 | フェルト | FELT | 1 |
| 36 | 212147 | フェルト押エ | FELT RETAINER | 1 |
| 37 | 2905 | 平ネジ／C 5 | SCREW | 1 |
| 38 | XXXXXX | 上送り歯 | TOP FEED DOG | 1 |

××××××は、54～75頁参照。
See pages 54～75 for ××××××.

www.college-sewing.co.uk

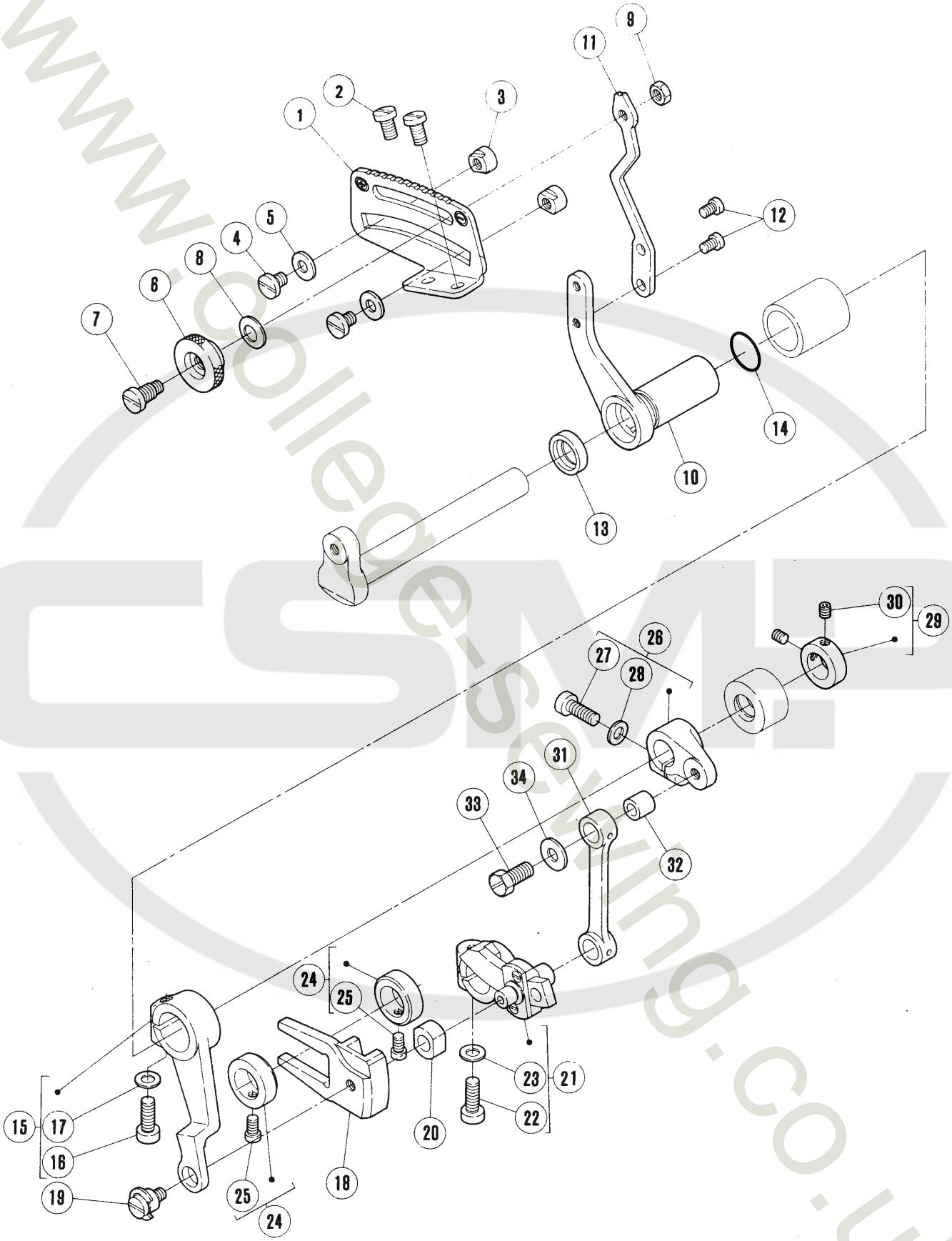


www.college-sewing.co.uk

# 上送り機構(2)　TOP FEED MECHANISM(2)

| REF. NO. | PART NO. 部品番号 | 名　称 | NAME | QT. |
|---|---|---|---|---|
| 1 | 212416 | 調節板 | BLADE GUIDE | 1 |
| 2 | 5117 | 平ネジ／C 5 | SCREW | 2 |
| 3 | 210171 | ストッパー | STOPPER | 2 |
| 4 | 2905 | 平ネジ／C 5 | SCREW | 2 |
| 5 | 201185 | 座金 | WASHER | 2 |
| 6 | 210167 | ツマミ | THUMB NUT | 1 |
| 7 | 5486 | 段付ネジ／C 5 | SCREW | 1 |
| 8 | 211301 | 皿バネ | SPRING | 1 |
| 9 | 3044 | 六角ナット／C 5 | NUT | 1 |
| 10 | 212042 | 調節レバー | LEVER | 1 |
| 11 | 212419 | レバー／調節 | LEVER | 1 |
| 12 | 5053 | 平ネジ／C 4 | SCREW | 2 |
| 13 | 204052A | オイルシール | OIL SEAL | 1 |
| 14 | 201022 | Oリング | O RING | 1 |
| 15 | 212652 | 調節レバー | LEVER | 1 |
| 16 | 5594 | 平ネジ／C 7 | SCREW | 1 |
| 17 | 307003 | 座金 | WASHER | 1 |
| 18 | 212651 | 角駒案内 | GUIDE/BLOCK | 1 |
| 19 | 5316 | 段付ネジ／C 5 | SCREW | 1 |
| 20 | 252531 | 角駒 | BLOCK | 1 |
| 21 | 212646 | クランク（組） | CRANK ASSEMBLY | 1 |
| 22 | 5594 | 平ネジ／C 7 | SCREW | 1 |
| 23 | 307003 | 座金 | WASHER | 1 |
| 24 | 212653 | カラー | COLLAR | 2 |
| 25 | 1998-2 | 平ネジ／C 4 | SCREW | 2 |
| 26 | 212035 | クランク | CRANK | 1 |
| 27 | 5594 | 平ネジ／C 7 | SCREW | 1 |
| 28 | 307003 | 座金 | WASHER | 1 |
| 29 | 212039 | カラー | COLLAR | 1 |
| 30 | 5292 | 止ネジ／C 3 | SCREW | 2 |
| 31 | 212650 | リンク | LINK | 1 |
| 32 | 210148 | ブッシュ | BUSHING | 1 |
| 33 | 5489 | 六角ネジ／C 5 | SCREW | 1 |
| 34 | 204115 | 座金 | WASHER | 1 |

www.college-sewing.co.uk

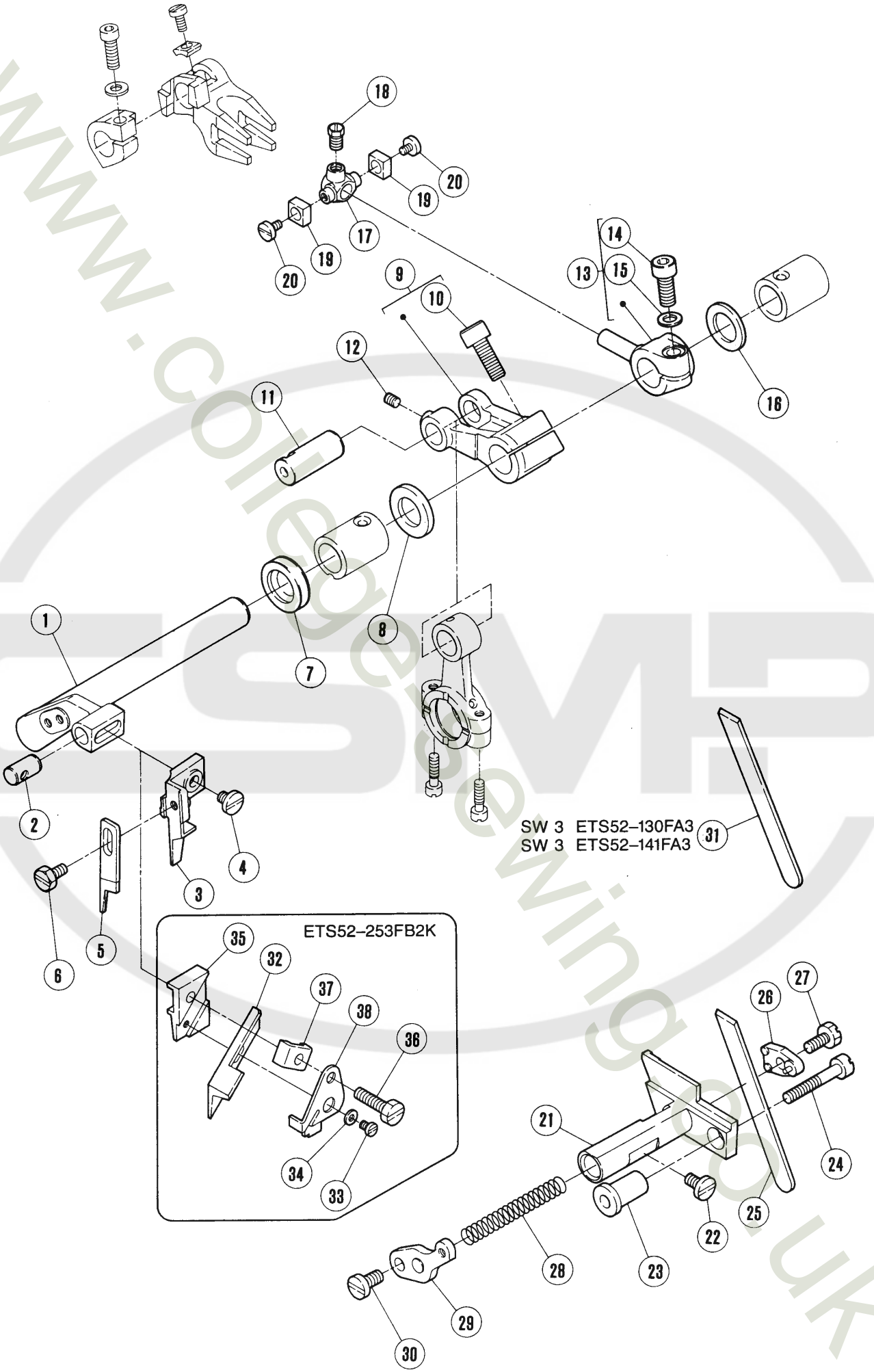


SW＝SEAM WIDTH　縫巾



www.collegesewing.co.uk

# 上下メス機構 KNIFE DRIVE MECHANISM

| REF. NO. | PART NO. 部品番号 | 名　称 | NAME | QT. |
|---|---|---|---|---|
| 1 | 213222A | 上メス台 | UPPER KNIFE LEVER | 1 |
| 2 | 208579 | 平行ピン | PIN | 1 |
| 3 | 210178A | 上メス抱キ | UPPER KNIFE CLAMP | 1 |
| 4 | 2902 | 平ネジ／C 5 | SCREW | 1 |
| 5 | 201121A | 上メス | UPPER KNIFE | 1 |
| 6 | 5088 | 六角ネジ／C 4 | SCREW | 1 |
| 7 | 210069 | オイルシール | OIL SEAL | 1 |
| 8 | 206180 | 座金 | WASHER | 1 |
| 9 | 210314 | クランク／上メス | CRANK/UPPER KNIFE DRIVE | 1 |
| 10 | 5457 | 平ネジ／C 9 | SCREW | 1 |
| 11 | 210175 | 平行ピン | PIN | 1 |
| 12 | 5461 | 止ネジ／C 5 | SCREW | 1 |
| 13 | 212408 | クランク | CRANK | 1 |
| 14 | 5594 | 平ネジ／C 7 | SCREW | 1 |
| 15 | 307003 | 座金 | WASHER | 1 |
| 16 | 208235 | 座金 | WASHER | 1 |
| 17 | 212409 | クランクピン | PIN | 1 |
| 18 | 5084 | 六角ネジ／C 5 | SCREW | 1 |
| 19 | 212410 | 角駒 | BLOCK | 2 |
| 20 | 5597 | 平ネジ／C 1 | SCREW | 2 |
| 21 | 210179 | 下メス台 | LOWER KNIFE HOLDER | 1 |
| 22 | 4009-1 | 平ネジ／C 5 | SCREW | 1 |
| 23 | 210180 | 案内／下メス台 | GUIDE/LOWER KNIFE HOLDER | 1 |
| 24 | 5094 | 平ネジ／C 5 | SCREW | 1 |
| 25 | 202295 | 下メス／厚メス | LOWER KNIFE/THICK | 1 |
| 26 | 210184 | 下メス押エ | CLAMP/LOWER KNIFE | 1 |
| 27 | 2193 | 六角ネジ／C 5 | SCREW | 1 |
| 28 | 202340 | 圧縮バネ | SPRING | 1 |
| 29 | 210183 | 下メスバネ受ケ | SPRING RETAINER | 1 |
| 30 | 5117 | 平ネジ／C 5 | SCREW | 1 |
| 31 | 201127A | 下メス／薄メス | LOWER KNIFE/SIN | 1 |
| 32 | 211771 | 角メス | ANGLED KNIFE | 1 |
| 33 | 1227 | 止ネジ／C 3 | SCREW | 1 |
| 34 | 300248 | 座金 | WASHER | 1 |
| 35 | 210756 | 角メス抱キ | ANGLED UPPER KNIFE CLAMP | 1 |
| 36 | 5504 | 六角ネジ／C 5 | SCREW | 1 |
| 37 | 210758 | 角メス押エ | ANGLED UPPER KNIFE GIB | 1 |
| 38 | 210759 | 補助板 | ANGLED UPPER KNIFE PLATE | 1 |

www.college-sewing.co.uk

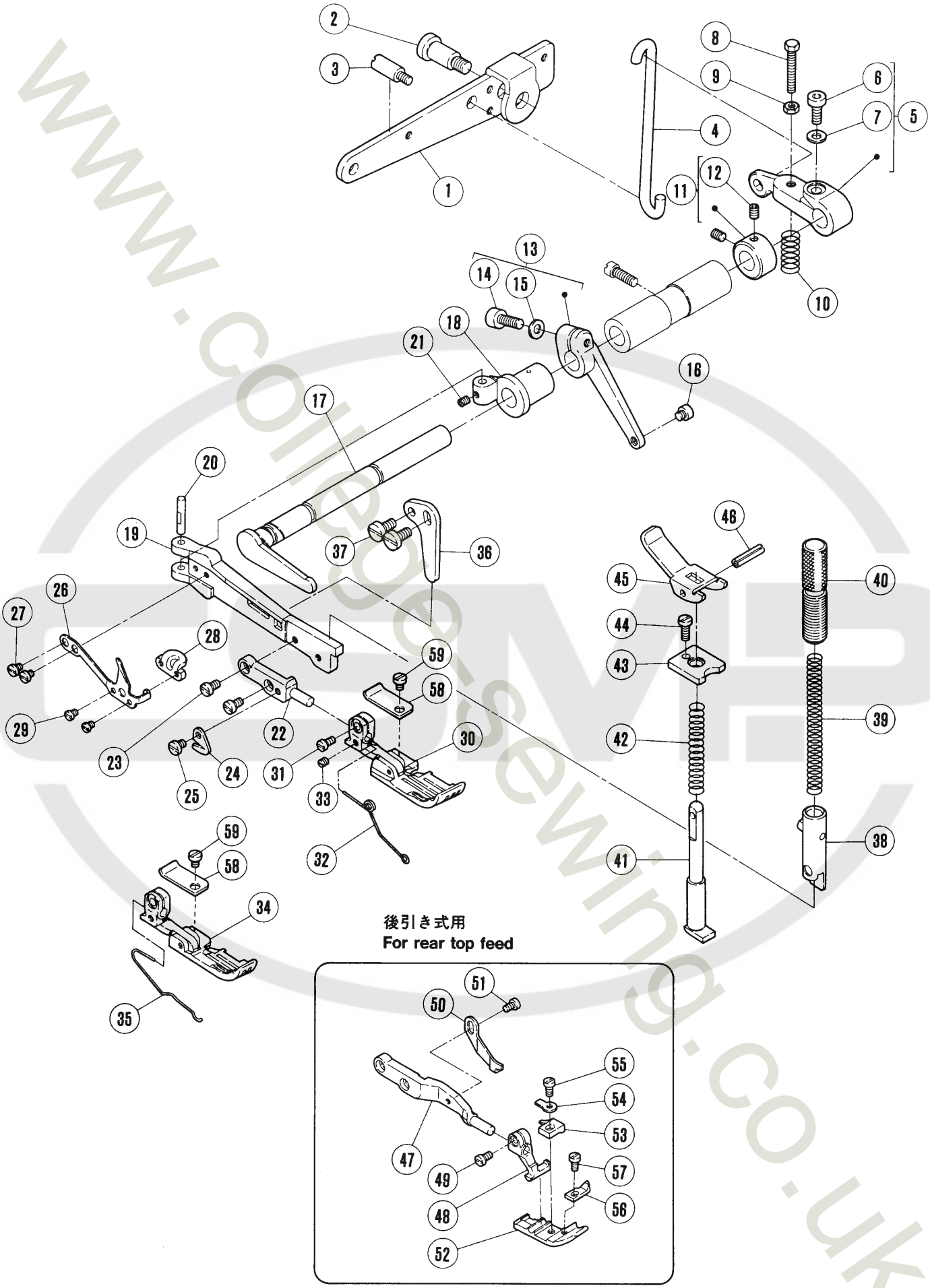


www.college-sewing.co.uk

| REF. NO. | PART NO. 部品番号 | 名　称 | NAME | QT. |
|---|---|---|---|---|
| 1 | 211636 | レバー／足揚ゲ | LEVER/FOOT LIFT | 1 |
| 2 | 2285B | 段付ネジ／C 9 | SCREW | 1 |
| 3 | 5481 | ピン付ネジ／C 5 | SCREW | 1 |
| 4 | 210335 | リンク／足揚ゲレバー | LINK/FOOT LIFT LEVER | 1 |
| 5 | 212050 | レバー／押エ揚ゲ | LEVER/FOOT LIFT | 1 |
| 6 | 5457 | 平ネジ／C 9 | SCREW | 1 |
| 7 | 207924 | 座金 | WASHER | 1 |
| 8 | 5503 | 六角ネジ／C 5 | SCREW | 1 |
| 9 | 3044 | 六角ナット／C 5 | NUT | 1 |
| 10 | 240172 | 圧縮バネ | SPRING | 1 |
| 11 | 210728 | カラー | COLLAR | 1 |
| 12 | 5292 | 止ネジ／C 3 | SCREW | 2 |
| 13 | 212052 | レバー／押エ揚ゲ | LEVER/FOOT LIFT | 1 |
| 14 | 5594 | 平ネジ／C 7 | SCREW | 1 |
| 15 | 307003 | 座金 | WASHER | 1 |
| 16 | 5596 | ピン付ネジ／C 4 | SCREW | 1 |
| 17 | 212047 | 軸／押エ台 | SHAFT/FOOT LIFT | 1 |
| 18 | 212049 | ヒンジ／押エ台 | HINGE/PRESSER ARM | 1 |
| 19 | 211823 | 押エ台 | PRESSER ARM | 1 |
| 20 | 210323 | 平行ピン | PIN | 1 |
| 21 | 5292 | 止ネジ／C 3 | SCREW | 1 |
| 22 | 212420 | 押エブラケット | BRACKET/PRESSER FOOT | 1 |
| 23 | 5089 | 平ネジ／C 3 | SCREW | 2 |
| 24 | 202451 | チェーンカッター | CHAIN CUTTER | 1 |
| 25 | 2921 | 平ネジ／C 3 | SCREW | 1 |
| 26 | 212438 | 板バネ | FLAT SPRING | 1 |
| 27 | 5299 | 平ネジ／C 3 | SCREW | 2 |
| 28 | 212439 | 当金 | GUIDE | 1 |
| 29 | 5030 | 平ネジ／C 1 | SCREW | 2 |
| 30 | XXXXXX | 押エ（組） | PRESSER FOOT ASSEMBLY | 1 |
| 31 | 5328 | 平ネジ／C 4 | SCREW | 1 |
| 32 | 212669A | ネジリバネ | SPRING | 1 |
| 33 | 1459 | 止ネジ／C 4 | SCREW | 1 |
| 34 | XXXXXX | 押エ（組） | PRESSER FOOT ASSEMBLY | 1 |
| 35 | 212719A | 線細工バネ | SPRING | 1 |
| 36 | 210517 | ストッパー／押エ台 | STOPPER/PRESSER ARM | 1 |
| 37 | 5117 | 平ネジ／C 5 | SCREW | 1 |
| 38 | 208537 | 押エ棒（組） | PRESSER BAR COMPLETE | 1 |
| 39 | 211941 | 圧縮バネ | SPRING | 1 |
| 40 | 208774 | 調節ネジ | THUMB SCREW | 1 |
| 41 | 202645 | 手揚軸 | PLUNGER | 1 |
| 42 | 201395 | 圧縮バネ | SPRING | 1 |
| 43 | 208599 | 案内板 | BUSHING | 1 |
| 44 | 5029 | 平ネジ／C 5 | SCREW | 1 |
| 45 | 211657 | 手揚ゲ | LEVER/HAND LIFT | 1 |
| 46 | 202647A | スプリングピン | PIN | 1 |
| 47 | 212705 | ブラケット／押エ | BRACKET/PRESSER FOOT | 1 |
| 48 | 208525-B | ブラケット／押エ | BRACKET/PRESSER FOOT | 1 |
| 49 | 5328 | 平ネジ／C 4 | SCREW | 1 |
| 50 | 212069 | ストッパー | STOPPER | 1 |
| 51 | 2921 | 平ネジ／C 3 | SCREW | 1 |
| 52 | XXXXXX | 押エ | PRESSER FOOT | 1 |
| 53 | XXXXXX | 押エ爪 | PRESSER FOOT FINGER | 1 |
| 54 | 201156 | 取付板／押エ | SET PLATE/PRESSER FOOT | 1 |
| 55 | 5089 | 平ネジ／C 3 | SCREW | 1 |
| 56 | 211557 | 補助押エ | FABRIC GUARD | 1 |
| 57 | 1333 | 平ネジ／C 1 | SCREW | 1 |
| 58 | 212668 | 補助板 | EUXILIARY PLATE | 1 |
| 59 | 5030 | 平ネジ／C 1 | SCREW | 1 |

××××××は、54～75頁参照。
See pages 54～75 for ××××××.



www.colleges-sewing.co.uk

■ 新型ポンプ

機械番号 8613662 以降のミシン(1987年7月以降に生産)には新型ポンプが使用されています。

■ PLEASE NOTE:

The machines ( after the machine number 8613662 ) which are manufactured from July, 1987.

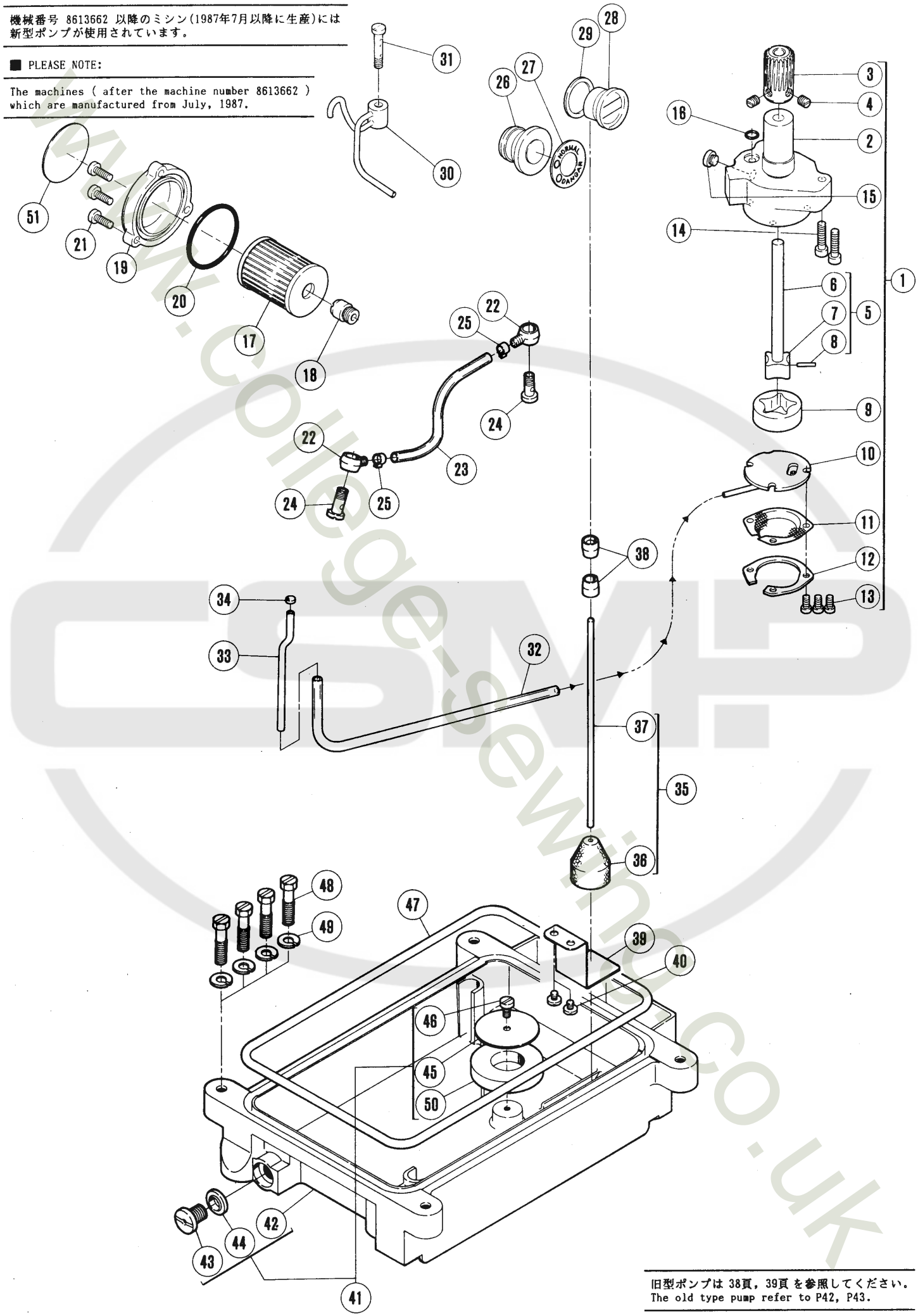


旧型ポンプは 38頁，39頁 を参照してください。
The old type pump refer to P42, P43.

www.college-sewing.co.uk

| REF. NO. | PART NO. 部品番号 | 名　称 | NAME | QT. |
|---|---|---|---|---|
| 1 | 212972A91 | ポンプ（組） | TROCHOID PUMP ASSEMBLY | 1 |
| 2 | 212976 | ポンプ本体 | TROCHOID PUMP | 1 |
| 3 | 211531 | ウォームホイール | WORM WHEEL | 1 |
| 4 | 5060 | 止ネジ／C８ | SCREW | 2 |
| 5 | 212978-91 | ローター（内）軸 | ROTOR (INSIDE) SHAFT | 1 |
| 6 | 212979 | 軸 | SHAFT | 1 |
| 7 | 212980 | ローター（内） | ROTOR (INSIDE) | 1 |
| 8 | 206468 | 平行ピン | PIN | 1 |
| 9 | 212981 | ローター（外） | ROTOR (OUTSIDE) | 1 |
| 10 | 212983-91 | 側板 | PLATE | 1 |
| 11 | 213578A | フィルター | FILTER | 1 |
| 12 | 213579 | 当金 | GUIDE | 1 |
| 13 | 1175-2 | 平ネジ／C４ | SCREW | 3 |
| 14 | 5095 | 平ネジ／C５ | SCREW | 2 |
| 15 | 5145 | 平ネジ／C１０ | SCREW | 1 |
| 16 | 204185 | Oリング | O RING | 1 |
| 17 | 206233 | エレメント | OIL FILTER | 1 |
| 18 | 210200 | ブラケット／フィルター | BRACKET/OIL FILTER | 1 |
| 19 | 210201-FD | フィルター蓋 | OIL FILTER CAP | 1 |
| 20 | 206431 | Oリング | O RING | 1 |
| 21 | 5118 | 平ネジ／C５ | SCREW | 3 |
| 22 | 200136 | 継手 | JOINT | 2 |
| 23 | 205113A | 給油パイプ | OIL TUBE | 1 |
| 24 | 200152 | 継手ネジ | JOINT SCREW | 2 |
| 25 | 202199 | クランプ | CLAMP | 2 |
| 26 | 210198 | 給油標示（組） | OIL MONITOR COMPLETE | 1 |
| 27 | 210199 | 銘板／給油標示 | NAME PLATE/OIL MONITOR | 1 |
| 28 | 210190 | オイルゲージ | OIL SIGHT GAUGE | 1 |
| 29 | 211369 | 座金 | WASHER | 1 |
| 30 | 212188 | 噴油管 | OIL DISTRIBUTOR | 1 |
| 31 | 212998 | 継手ネジ | JOINT SCREW | 1 |
| 32 | 212152 | チューブ | TUBE | 1 |
| 33 | 212153 | パイプ | PIPE | 1 |
| 34 | 303487 | フェルト | FELT | 1 |
| 35 | 210193 | オイル指示（組） | INDICATOR COMPLETE | 1 |
| 36 | 210191 | フロート | FLOAT | 1 |
| 37 | 210192 | オイル指示 | INDICATOR | 1 |
| 38 | 210194 | 案内／オイル指示 | INDICATOR GUIDE | 2 |
| 39 | 210510 | オイル指示受 | INDICATOR SUPPORT | 1 |
| 40 | 2905 | 平ネジ／C５ | SCREW | 2 |
| 41 | 212634 | オイルパン（組） | OIL RESERVOIR COMPLETE | 1 |
| 42 | 210211 | オイルパン | OIL RESERVOIR | 1 |
| 43 | 5138B | 平ネジ／H１１ | SCREW | 1 |
| 44 | 202287A | ガスケット | GASKET | 1 |
| 45 | 210521 | マグネット台座 | MAGNET BRACKET | 1 |
| 46 | 5117 | 平ネジ／C５ | SCREW | 1 |
| 47 | 210212 | Oリング | O RING | 1 |
| 48 | 5113 | 平ネジ／C５ | SCREW | 4 |
| 49 | 202045 | バネ座金 | SPRING WASHER | 4 |
| 50 | 210520 | マグネット | MAGNET | 1 |
| 51 | 9A3002 | フィルターシール | FILTER SEAL | 1 |

www.colleges-sewing.co.uk

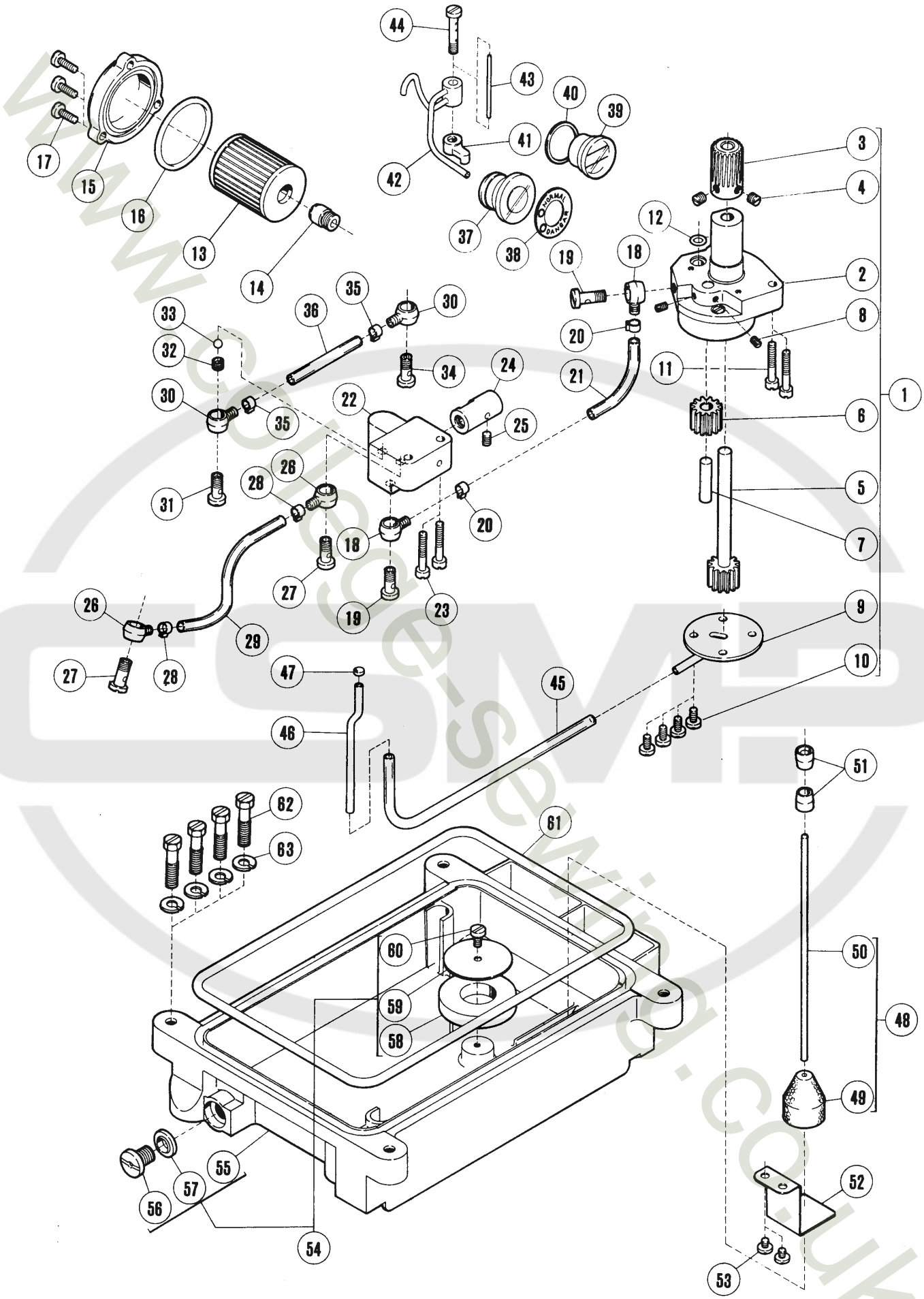
44
43
40
39
41
42
17
15
16
13
14
37
38
3
4
12
18
19
2
8
20
11
1
6
5
7
9
10
35
30
36
33
32
34
24
21
22
25
30
35
31
26
28
20
18
27
19
23
26
29
27
28
47
45
46
51
62
61
63
60
50
59
48
58
49
55
57
56
52
54
53

# 給油機構(旧タイプ) LUBRICATING MECHANISM (OLD TYPE)

| REF. NO. | PART NO. 部品番号 | 名　称 | NAME | QT. |
|---|---|---|---|---|
| 1 | 212148 | ポンプ(組) | OIL PUMP ASSEMBLY | 1 |
| 2 | 210188 | ポンプ本体 | GEAR PUMP | 1 |
| 3 | 211531 | ウォームホイール | WORM WHEEL | 1 |
| 4 | 5060 | 止ネジ/C8 | SCREW | 2 |
| 5 | 208687 | ポンプギヤー(A) | GEAR | 1 |
| 6 | 201295 | ギヤー | GEAR | 1 |
| 7 | 204184 | 軸/ギヤー | GEAR SHAFT | 1 |
| 8 | 1458 | 止ネジ/C5 | SCREW | 2 |
| 9 | 212149 | 側板 | CASING PLATE | 1 |
| 10 | 5117 | 平ネジ/C5 | SCREW | 4 |
| 11 | 5095 | 平ネジ/C5 | SCREW | 2 |
| 12 | 204185 | Oリング | O RING | 1 |
| 13 | 206233 | エレメント | OIL FILTER | 1 |
| 14 | 210200 | ブラケット/フィルター | BRACKET/OIL FILTER | 1 |
| 15 | 210201-FD | フィルター蓋 | OIL FILTER CAP | 1 |
| 16 | 206431 | Oリング | O RING | 1 |
| 17 | 5118 | 平ネジ/C5 | SCREW | 3 |
| 18 | 200136 | 継手 | JOINT | 2 |
| 19 | 200152 | 継手ネジ | JOINT SCREW | 2 |
| 20 | 202199 | クランプ | CLAMP | 2 |
| 21 | 210701 | チューブ | OIL TUBE | 1 |
| 22 | 210206 | バイパス台 | BY-PASS BLOCK | 1 |
| 23 | 5095 | 平ネジ/C5 | SCREW | 2 |
| 24 | 205635 | バイパス弁(組) | BY-PASS VALVE ASSEMBLY | 1 |
| 25 | 1458 | 止ネジ/C5 | SCREW | 1 |
| 26 | 200136 | 継手 | JOINT | 2 |
| 27 | 200152 | 継手ネジ | JOINT SCREW | 2 |
| 28 | 202199 | クランプ | CLAMP | 2 |
| 29 | 205763 | チューブ | OIL TUBE | 1 |
| 30 | 200136 | 継手 | JOINT | 2 |
| 31 | 200152 | 継手ネジ | JOINT SCREW | 1 |
| 32 | 210744 | 逆止弁弁座 | POST | 1 |
| 33 | 200144 | ボール | BALL | 1 |
| 34 | 200152 | 継手ネジ | JOINT SCREW | 1 |
| 35 | 202199 | クランプ | CLAMP | 2 |
| 36 | 210208 | ボール | TUBE | 1 |
| 37 | 210198 | 給油標示(組) | OIL MONITOR COMPLETE | 1 |
| 38 | 210199 | 銘板/給油標示 | NAME PLATE/OIL MONITOR | 1 |
| 39 | 210190 | オイルゲージ | OIL SIGHT GAUGE | 1 |
| 40 | 211369 | 座金 | WASHER | 1 |
| 41 | 210202 | 給油ブロック | LUBRICATION BLOCK | 1 |
| 42 | 212188 | 噴油管 | OIL DISTRIBUTOR | 2 |
| 43 | 210205 | 平行ピン | PIN | 1 |
| 44 | 210204 | 継手ネジ | JOINT SCREW | 1 |
| 45 | 212152 | チューブ | TUBE | 1 |
| 46 | 212153 | パイプ | PIPE | 1 |
| 47 | 303487 | フェルト | FELT | 1 |
| 48 | 210193 | オイル指示(組) | INDICATOR COMPLETE | 1 |
| 49 | 210191 | フロート | FLOAT | 1 |
| 50 | 210192 | オイル指示 | INDICATOR | 1 |
| 51 | 210194 | 案内/オイル指示 | INDICATOR GUIDE | 2 |
| 52 | 210510 | オイル指示受 | INDICATOR SUPPORT | 1 |
| 53 | 2905 | 平ネジ/C5 | SCREW | 2 |
| 54 | 212634 | オイルパン(組) | OIL RESERVOIR COMPLETE | 1 |
| 55 | 210211 | オイルパン | OIL RESERVOIR | 1 |
| 56 | 5138B | 平ネジ/H11 | SCREW | 1 |
| 57 | 202287A | ガスケット | GASKET | 1 |
| 58 | 210520 | マグネット | MAGNET | 1 |
| 59 | 210521 | マグネット台座 | MAGNET BRACKET | 1 |
| 60 | 5117 | 平ネジ/C5 | SCREW | 1 |
| 61 | 210212 | Oリング | O RING | 1 |
| 62 | 5113 | 平ネジ/C5 | SCREW | 4 |
| 63 | 202045 | バネ座金 | SPRING WASHER | 4 |

www.colleges-saving.co.uk

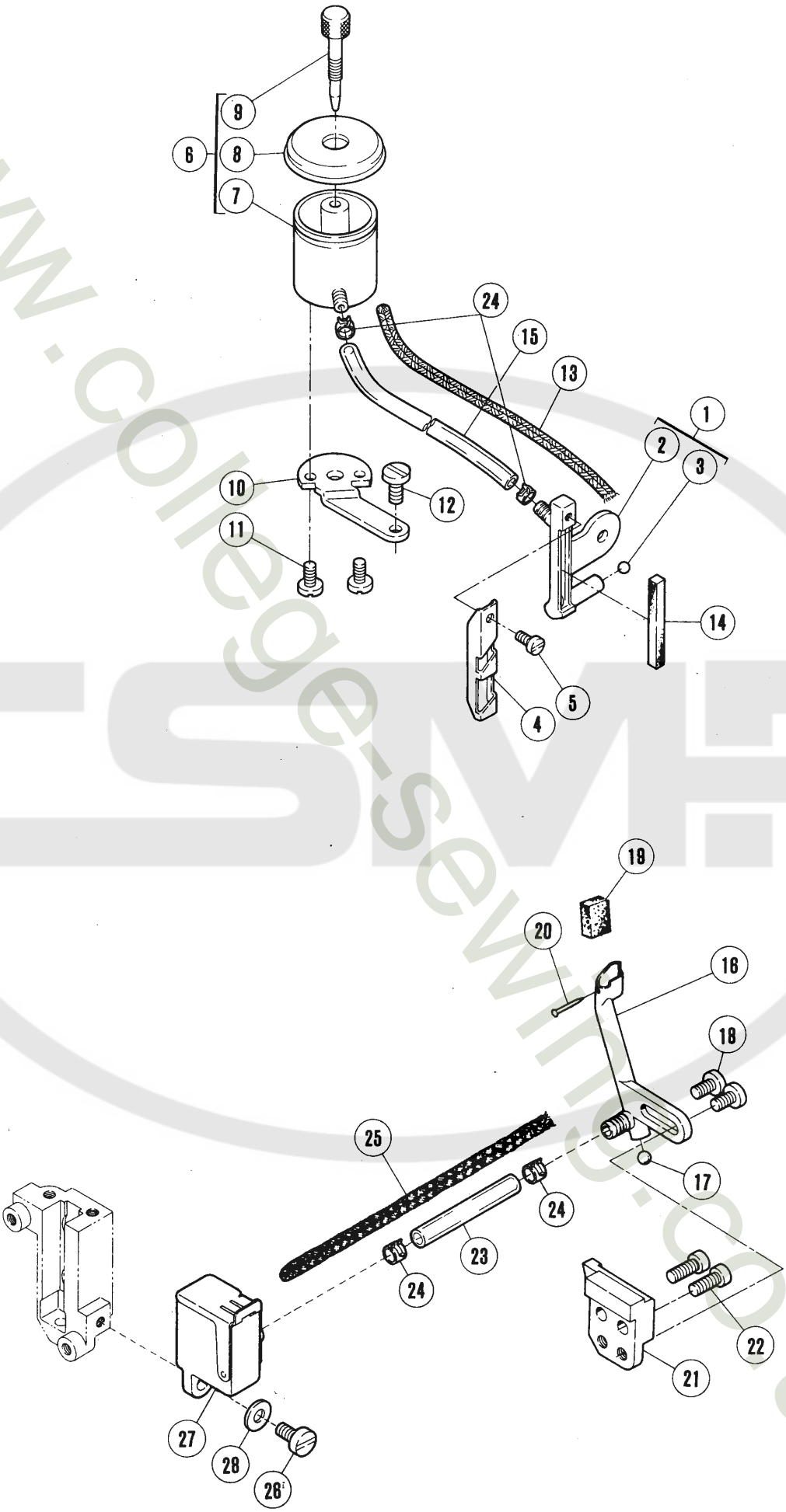


www.college-sewing.co.uk

| REF. NO. | PART NO. 部品番号 | 名　称 | NAME | QT. |
|---|---|---|---|---|
| 1 | 212635-ME | 針冷却器（組） | NEEDLE COOLER ASSEMBLY | 1 |
| 2 | 211315 | 針冷却器 | NEEDLE THREAD LUBRICATOR | 1 |
| 3 | 240097 | 栓 | PLUG | 1 |
| 4 | 211316 | 糸案内 | THREAD GUIDE | 1 |
| 5 | 1202 | 平ネジ／C 4 | SCREW | 1 |
| 6 | 205897-91 | シリコンタンク（上）組 | SILICONE OIL RESERVOIR (UPPER) | 1 |
| 7 | 202476-1 | シリコンタンク（上） | SILICONE OIL RESERVOIR (UPPER) | 1 |
| 8 | 202476-4 | 蓋 | CAP | 1 |
| 9 | 202476-3 | 油量調節棒 | SILICONE OIL REGULATOR | 1 |
| 10 | 211317 | ブラケット | BRACKET | 1 |
| 11 | 1202 | 平ネジ／C 4 | SCREW | 2 |
| 12 | 5117 | 平ネジ／C 5 | SCREW | 1 |
| 13 | 202176 | 給油紐 | OIL WICK | 1 |
| 14 | 211318 | フェルト | OIL FELT | 1 |
| 15 | 211319 | チューブ | OIL TUBE | 1 |
| 16 | 210213 | 針冷却器 | NEEDLE COOLER | 1 |
| 17 | 210214 | 栓 | PLUG | 1 |
| 18 | 5091 | 平ネジ／C 5 | SCREW | 2 |
| 19 | 204466 | 給油フェルト | OIL WICK | 1 |
| 20 | 210766 | 止ピン | PIN | 1 |
| 21 | 210215 | ブラケット | BRACKET/NEEDLE COOLER | 1 |
| 22 | 5012 | 平ネジ／C 3 | SCREW | 2 |
| 23 | 211639 | チューブ | OIL TUBE | 1 |
| 24 | 200155 | クランプ | TUBE CLAMP | 4 |
| 25 | 202176 | 給油紐 | OIL WICK | 1 |
| 26 | 210539 | シリコンタンク（下）組 | SILICONE OIL RESERVOIR (LOWER) | 1 |
| 27 | 5345 | 平ネジ／C 5 | SCREW | 1 |
| 28 | 201185 | 座金 | WASHER | 1 |

www.college-sewing.co.uk

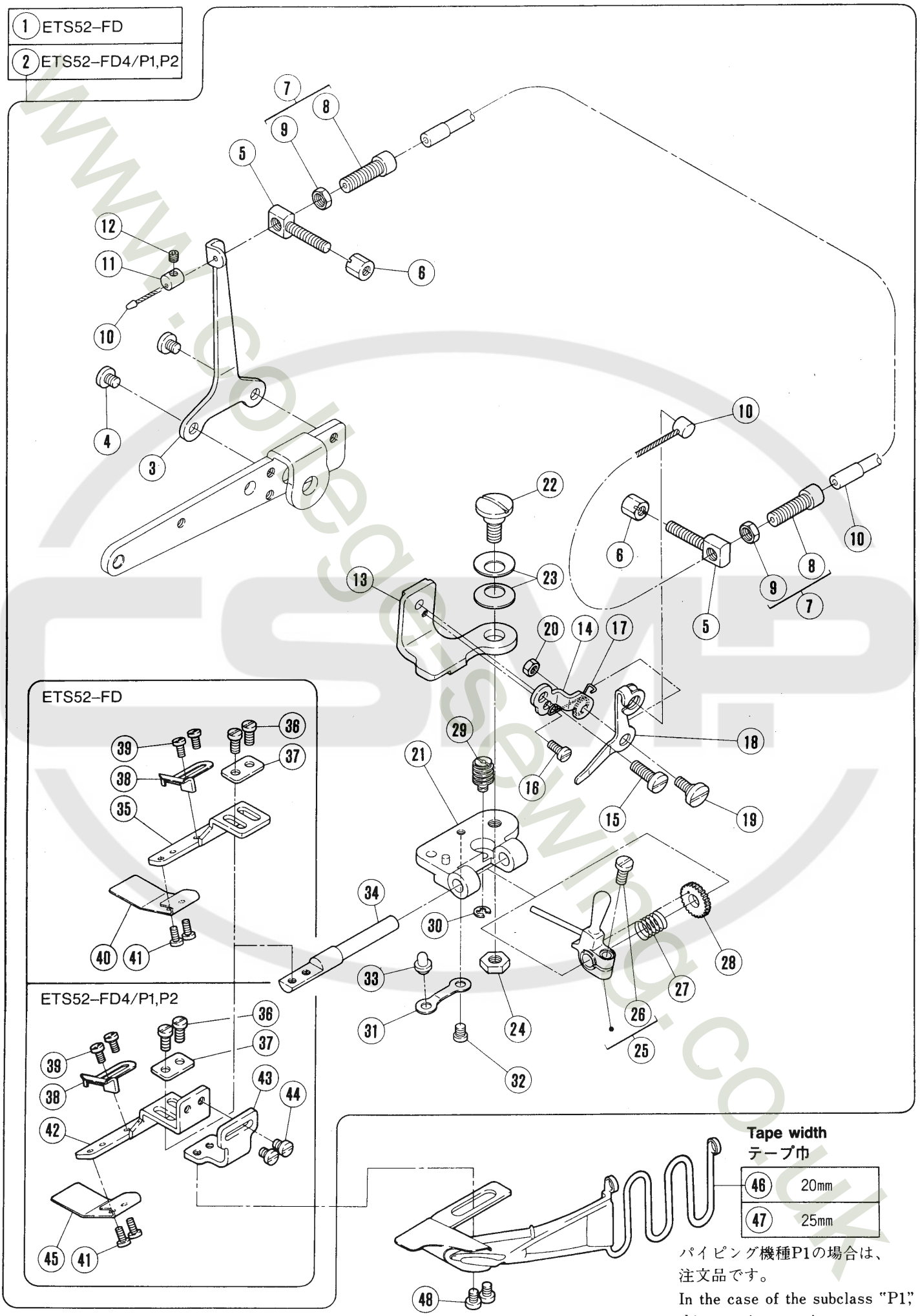


www.isolesewing.co.uk

# ヒダ取り装置 SHIRRING ATTACHMENT

| REF. NO. | PART NO. 部品番号 | 名　称 | NAME | QT. |
|---|---|---|---|---|
| 1 | 212655 | ヒダ取り装置（組） | SHIRRING ATTACHMENT COMPLETE | 1 |
| 2 | 212655A91 | ヒダ取り装置（組） | SHIRRING ATTACHMENT COMPLETE | 1 |
| 3 | 212433 | レバー | LEVER | 1 |
| 4 | 2905 | 平ネジ／C 5 | SCREW | 2 |
| 5 | 212437 | ブラケット | BRACKET | 2 |
| 6 | 5111 | 六角ネジ／C 5 | SCREW | 2 |
| 7 | 212436 | ケーブル受ケ | CABLE SUPPORT | 2 |
| 8 | 212477 | ケーブル受ケ | CABLE SUPPORT | 2 |
| 9 | 4806 | 六角ナット／M 6 | NUT | 2 |
| 10 | 212435 | ケーブル | CABLE | 1 |
| 11 | 212434 | ストッパー | STOPPER | 1 |
| 12 | 1459 | 止ネジ／C 4 | SCREW | 1 |
| 13 | 212600 | ブラケット | BRACKET | 1 |
| 14 | 212430 | ブラケット | BRACKET | 1 |
| 15 | 5118 | 平ネジ／C 5 | SCREW | 1 |
| 16 | 5328 | 平ネジ／C 4 | SCREW | 1 |
| 17 | 212432 | 線細工バネ | SPRING | 1 |
| 18 | 212431 | レバー | LEVER | 1 |
| 19 | 5515 | 段付ネジ／C 4 | SCREW | 1 |
| 20 | 3091 | 六角ナット／C 4 | NUT | 1 |
| 21 | 212601 | ブラケット | BRACKET | 1 |
| 22 | 5380 | 段付ネジ／C 8 | SCREW | 1 |
| 23 | 204888 | 皿バネ | SPRING | 2 |
| 24 | 5104 | 六角ナット／C 8 | NUT | 1 |
| 25 | 212604 | レバー | LEVER | 1 |
| 26 | 1175-2 | 平ネジ／C 4 | SCREW | 1 |
| 27 | 212606 | ネジリバネ | SPRING | 1 |
| 28 | 212607 | ギヤー | GEAR | 1 |
| 29 | 212602 | ウォーム | WORM | 1 |
| 30 | 200555 | 止メ輪 | RING | 1 |
| 31 | 210684 | 板バネ | FLAT SPRING | 1 |
| 32 | 1234 | 平ネジ／C 4 | SCREW | 1 |
| 33 | 210683 | 段付ピン | PIN | 1 |
| 34 | 212603 | 軸 | ROD | 1 |
| 35 | 212659 | ブラケット | BRACKET | 1 |
| 36 | 1196 | 平ネジ／C 3 | SCREW | 2 |
| 37 | 210955 | 座金 | WASHER | 1 |
| 38 | 212660 | 布ガイド | CLOTH GUIDE | 1 |
| 39 | 5077 | 平ネジ／C 1 | SCREW | 2 |
| 40 | 212658 | ブレード | SHIRRING BLADE | 1 |
| 41 | 5077 | 平ネジ／C 1 | SCREW | 2 |
| 42 | 212938 | ブラケット | BRACKET | 1 |
| 43 | 212939 | ブラケット | BRACKET | 1 |
| 44 | 2921 | 平ネジ／C 3 | SCREW | 2 |
| 45 | 212658A | ブレード | SHIRRING BLADE | 1 |
| 46 | 211880 | バインダー（２０） | BINDER (20) | 1 |
| 47 | 211946 | バインダー（２５） | BINDER (25) | 1 |
| 48 | 2921 | 平ネジ／C 3 | SCREW | 2 |

www.college-sewing.co.uk

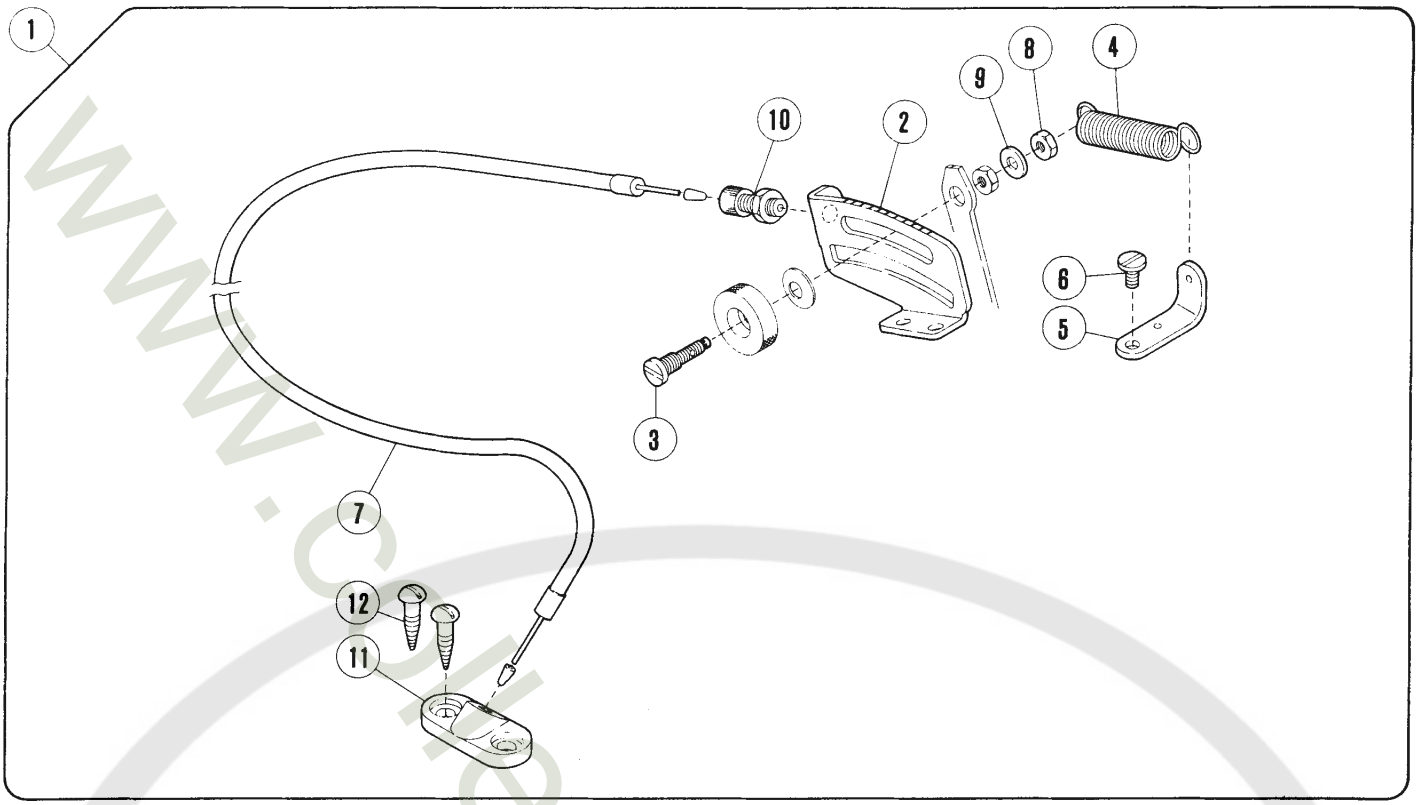


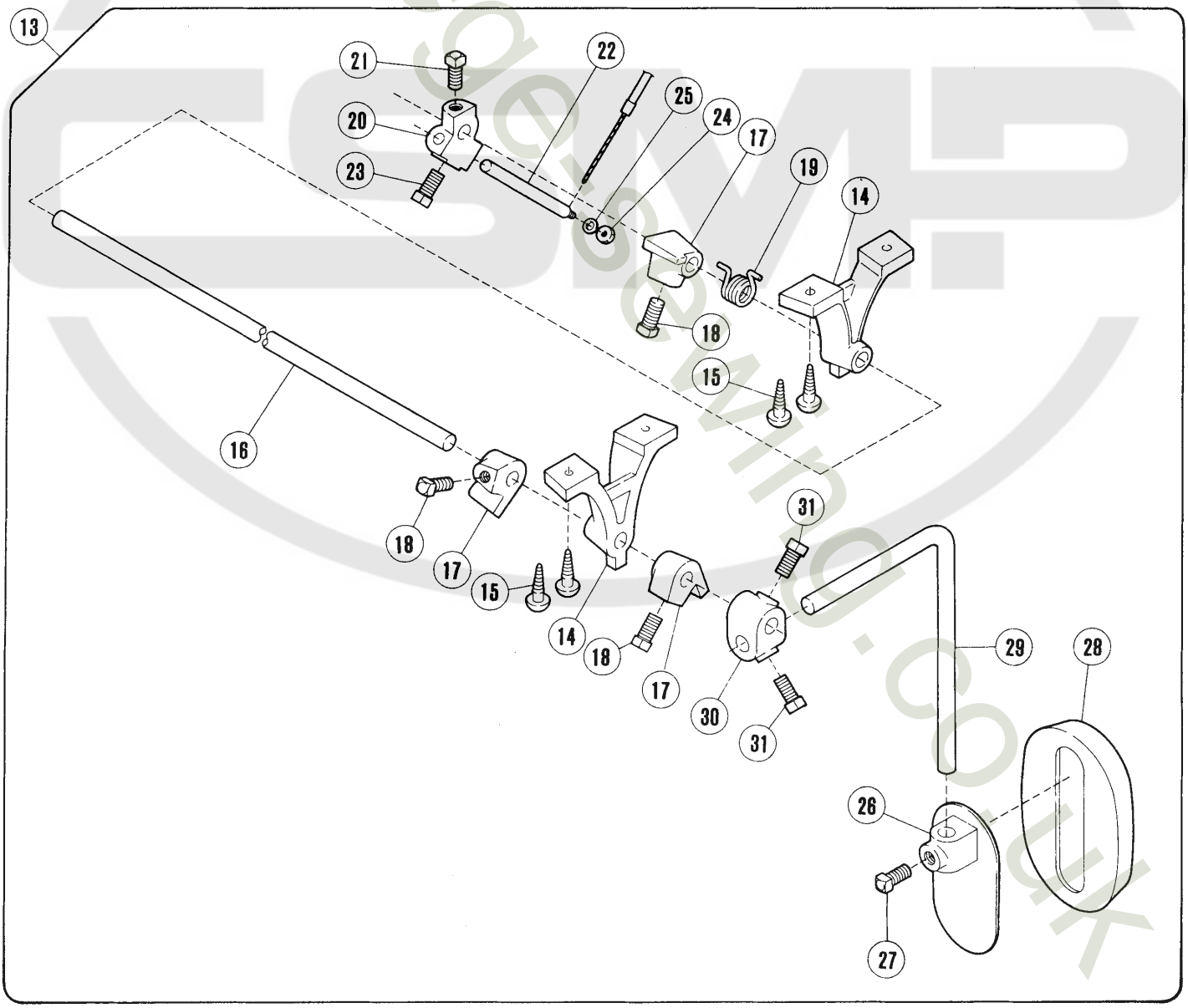


www.sleepsewing.co.uk

## KL装置（ヒザ駆動式）　KL DEVICE (MANUAL TYPE)

| REF. NO. | PART NO. 部品番号 | 名　称 | NAME | QT. |
|---|---|---|---|---|
| 1 | 212478 | インターミッテント装置 | INTERMITTENT ATTACHMENT | 1 |
| 2 | 212479 | 調節板 | BLADE GUIDE | 1 |
| 3 | 212480 | 段付ネジ | SCREW | 1 |
| 4 | 212481 | 引張リバネ | SPRING | 1 |
| 5 | 212482 | ラッチ | LATCH | 1 |
| 6 | 4009-1 | 平ネジ／C５ | SCREW | 1 |
| 7 | 212483 | ケーブル | CABLE | 1 |
| 8 | 3044 | 六角ナット／C５ | NUT | 1 |
| 9 | 204585 | 座金 | WASHER | 1 |
| 10 | 212436 | ケーブル受ケ | CABLE SUPPORT | 1 |
| 11 | 212484 | ブラケット | BRACKET | 1 |
| 12 | 4906 | 木ネジ（平）／４．８ | SCREW | 2 |
| 13 | 212487 | ヒザ駆動装置（組） | KNEE LIFTER ASSEMBLY | 1 |
| 14 | 207341-JA | フレーム | FRAME | 2 |
| 15 | 4906 | 木ネジ（平）／４．８ | SCREW | 4 |
| 16 | 212485 | 軸 | ROD | 1 |
| 17 | 207344-JA | カラー | COLLAR | 3 |
| 18 | 5543 | 四角ボルト／W５ | BOLT | 3 |
| 19 | 209287 | ネジリバネ | SPRING | 1 |
| 20 | 207350-JA | ブラケット | BRACKET | 1 |
| 21 | 5543 | 四角ボルト／W５ | BOLT | 1 |
| 22 | 212486 | レバー | LEVER | 1 |
| 23 | 5543 | 四角ボルト／W５ | BOLT | 1 |
| 24 | 4805 | 六角ナット／M５ | NUT | 1 |
| 25 | 202058 | 座金 | WASHER | 1 |
| 26 | 207345-JA | ヒザ当テ | KNEE PAD BASE | 1 |
| 27 | 5543 | 四角ボルト／W５ | BOLT | 1 |
| 28 | 207346 | ヒザ当テカバー | KNEE PAD | 1 |
| 29 | 212492 | 軸 | ROD | 1 |
| 30 | 212493-JA | ブラケット | BRACKET | 1 |
| 31 | 5543 | 四角ボルト／W５ | BOLT | 2 |

www.college-sewing.co.uk

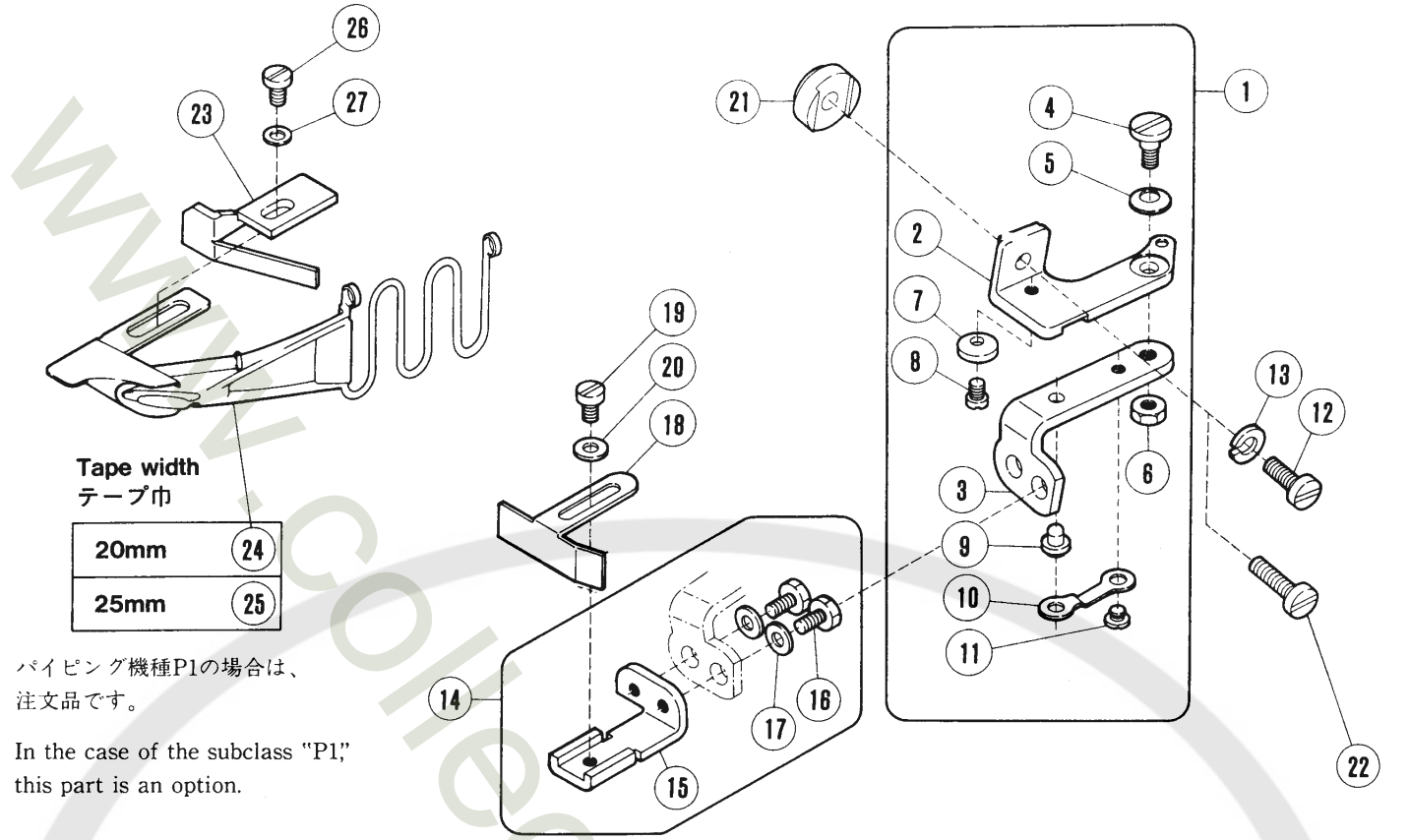


| Tape width テープ巾 | |
|---|---|
| 20mm | 24 |
| 25mm | 25 |

パイピング機種P1の場合は、
注文品です。

In the case of the subclass "P1," this part is an option.

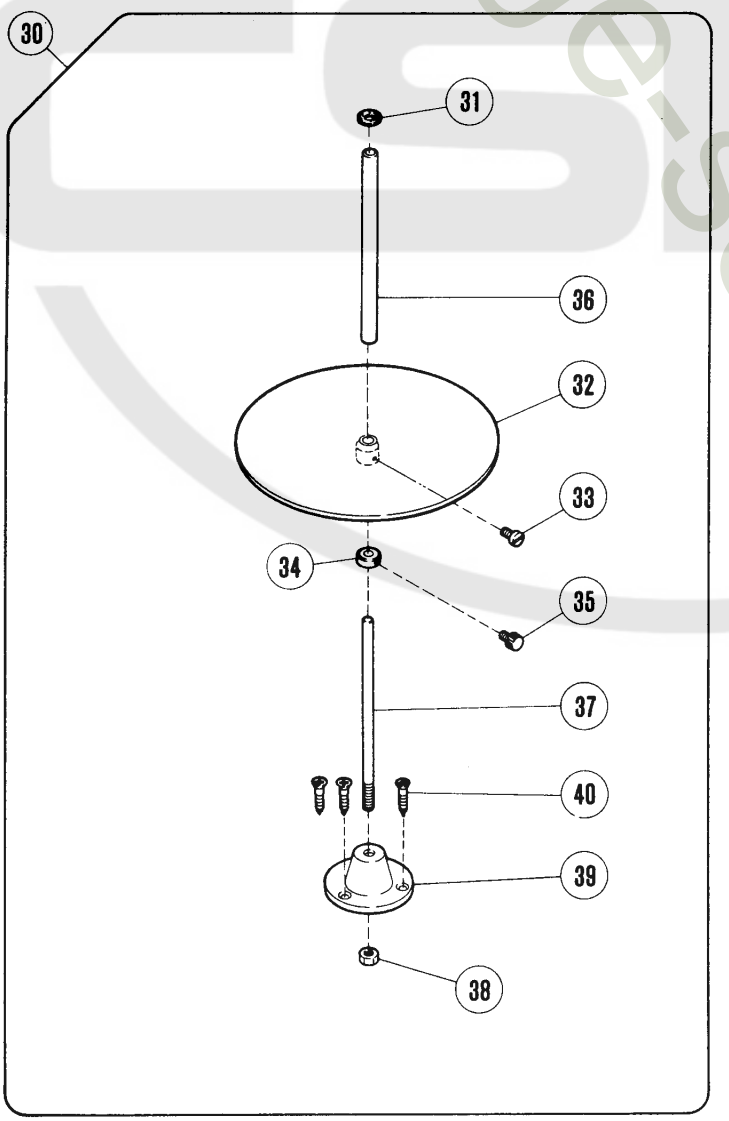


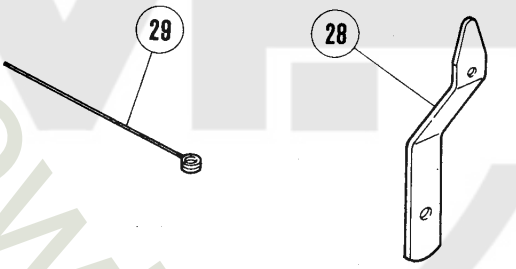


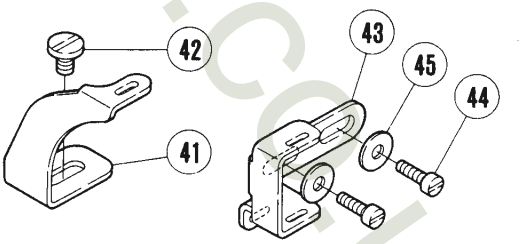


パイピング機種P1の場合は、
注文品です。

In the case of the subclass "P1," this part is an option.

www.college-sewing.co.uk

| REF. NO. | PART NO. 部品番号 | 名　称 | NAME | QT. |
|---|---|---|---|---|
| 1 | 210685 | 定規ブラケット（組） | CLOTH GUIDE BRACKET ASSEMBLY | 1 |
| 2 | 210680 | 定規ブラケット | CLOTH GUIDE BRACKET | 1 |
| 3 | 210681 | ヒンジ／定規ブラケット | HINGE/EDGE GUIDE BRACKET | 1 |
| 4 | 5184 | 段付ネジ／Ｃ５ | SCREW | 1 |
| 5 | 201191 | 皿バネ | SPRING | 1 |
| 6 | 3044 | 六角ナット／Ｃ５ | NUT | 1 |
| 7 | 210682 | ストッパー／ヒンジ | STOPPER | 1 |
| 8 | 5053 | 平ネジ／Ｃ４ | SCREW | 1 |
| 9 | 210683 | 段付ピン | PIN | 1 |
| 10 | 210684 | 板バネ | FLAT SPRING | 1 |
| 11 | 2906 | 平ネジ／Ｃ４ | SCREW | 1 |
| 12 | 5118 | 平ネジ／Ｃ５ | SCREW | 1 |
| 13 | 202286 | バネ座金 | SPRING WASHER | 1 |
| 14 | 210686 | 当定規台（組） | BRACKET COMPLETE/EDGE GUIDE | 1 |
| 15 | 210687 | 当定規台 | BRACKET/EDGE GUIDE | 1 |
| 16 | 5088 | 六角ネジ／Ｃ４ | SCREW | 2 |
| 17 | 167066 | 座金 | WASHER | 2 |
| 18 | 204667 | 当定規 | EDGE GUIDE | 1 |
| 19 | 1202 | 平ネジ／Ｃ４ | SCREW | 1 |
| 20 | 167066 | 座金 | WASHER | 1 |
| 21 | 212287 | スペーサー | SPACER | 1 |
| 22 | 5152 | 平ネジ／Ｃ５ | SCREW | 1 |
| 23 | 211879 | 当定規 | EDGE GUIDE | 1 |
| 24 | 211880 | バインダー（２０） | BINDER (20) | 1 |
| 25 | 211946 | バインダー（２５） | BINDER (25) | 1 |
| 26 | 1202 | 平ネジ／Ｃ４ | SCREW | 1 |
| 27 | 167066 | 座金 | WASHER | 1 |
| 28 | 211949 | 案内板 | CORD GUIDE PLATE | 1 |
| 29 | 413 | テープ通シ具 | TAPE INSERTING TOOL | 1 |
| 30 | 403 | テープガイド（組） | TAPE DISC ASSEMBLY | 1 |
| 31 | 406 | フェルト | FELT | 1 |
| 32 | 404 | カノコ台 | TAPE DISC | 1 |
| 33 | 4012 | 平ネジ／Ｍ４ | SCREW | 1 |
| 34 | 407 | カラー | COLLAR | 1 |
| 35 | 408 | 調節ネジ | ADJUSTING SCREW | 1 |
| 36 | 405 | 取付棒 | FIXING ROD | 1 |
| 37 | 409 | 軸 | SHAFT | 1 |
| 38 | 4818 | 六角ナット／Ｍ６ | NUT | 1 |
| 39 | 410 | ブラケット | BRACKET | 1 |
| 40 | 4908 | 木ネジ（皿）／４．５ | SCREW | 3 |
| 41 | 211264 | テープ案内（上） | TAPE GUIDE (UPPER) | 1 |
| 42 | 5453 | 平ネジ／Ｃ５ | SCREW | 1 |
| 43 | 211265 | テープ案内（下） | TAPE GUIDE (LOWER) | 1 |
| 44 | 1174 | 平ネジ／Ｃ４ | SCREW | 2 |
| 45 | 167066 | 座金 | WASHER | 2 |

www.college-sewing.co.uk

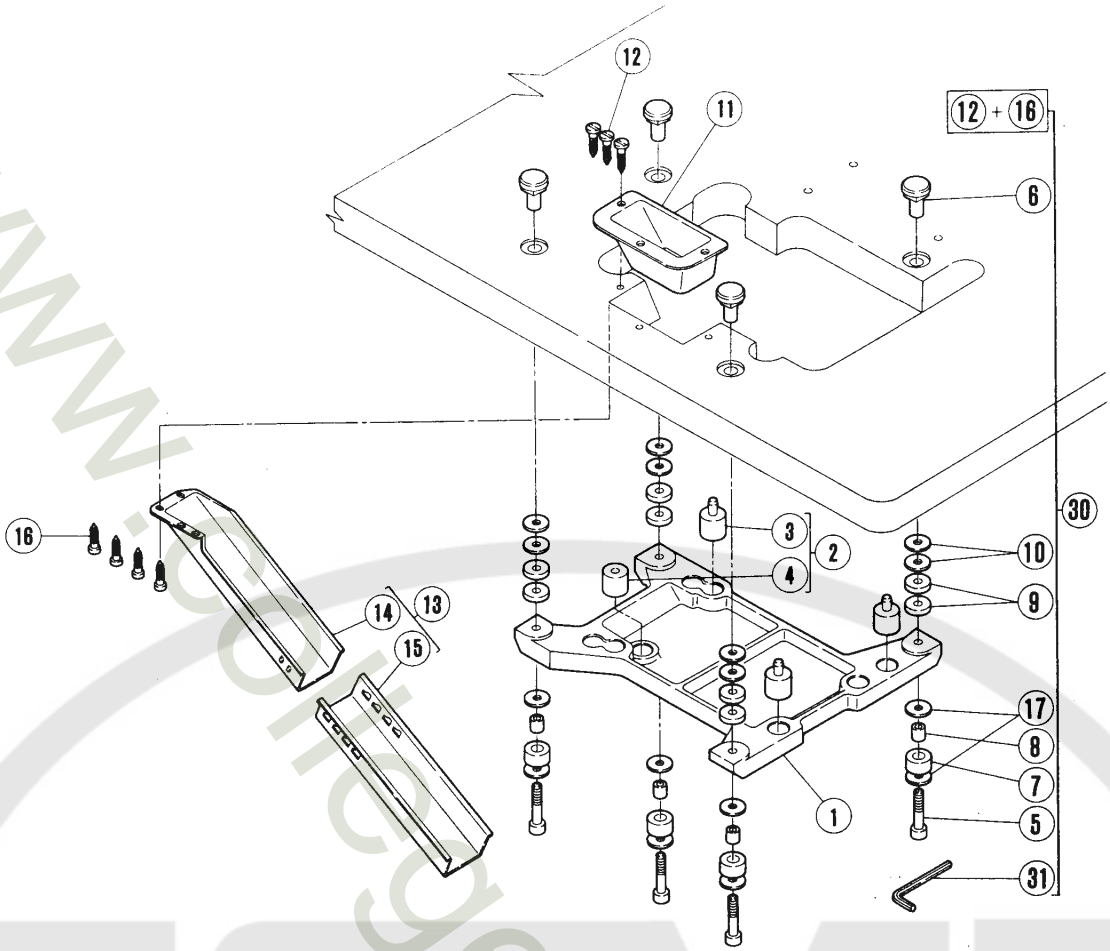


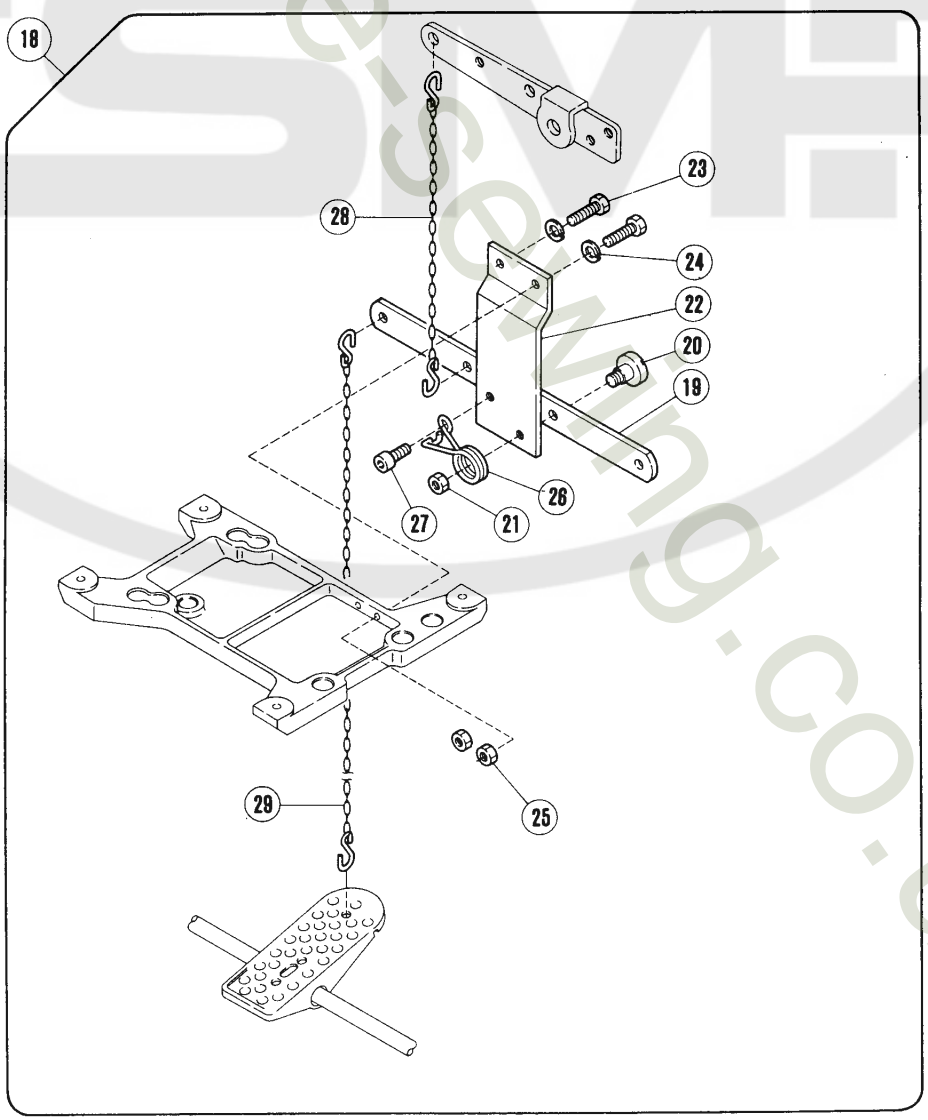


www.sohnegersewing.co.uk

# 半沈床式据付付属品　PARTS FOR SEMI-SUBMERGED INSTALLATION

| REF. NO. | PART NO. 部品番号 | 名　称 | NAME | QT. |
|---|---|---|---|---|
| 1 | 205466A | ミシン据付板 | MACHINE REST BOARD | 1 |
| 2 | 9029 | 防振ゴム（セット） | CUSHION RUBBER (SET) | 1 |
| 3 | 205473 | 防振ゴム | CUSHION RUBBER | 3 |
| 4 | 210523 | 防振ゴム | CUSHION RUBBER | 1 |
| 5 | 4512 | 平ネジ／M 8 | SCREW | 4 |
| 6 | 206336 | 半沈用ナット | NUT | 4 |
| 7 | 205764 | 防振ゴム | CUSHION RUBBER | 4 |
| 8 | 205765 | ライナー | LINER | 4 |
| 9 | 205467 | スペーサー | SPACER | 8 |
| 10 | 206337 | 座金 | WASHER | 8 |
| 11 | 205470-JA | 切屑受 | WASTE CHUTE TOP | 1 |
| 12 | 4904 | 木ネジ（皿）／3．5 | SCREW | 3 |
| 13 | 9050 | 切屑受（セット） | WASTE CHUTE SET | 1 |
| 14 | 205468-JA | 切屑受 | WASTE CHUTE TOP | 1 |
| 15 | 205469-JA | 切屑受（B） | WASTE CHUTE TOP (B) | 1 |
| 16 | 4906 | 木ネジ（平）／4．8 | SCREW | 4 |
| 17 | 206337 | 座金 | WASHER | 8 |
| 18 | 212441 | 押エ揚ゲ（組） | FOOT LIFTER ASSEMBLY | 1 |
| 19 | 212442 | レバー | LEVER | 1 |
| 20 | 5380 | 段付ネジ／C 8 | SCREW | 1 |
| 21 | 5104 | 六角ナット／C 8 | NUT | 1 |
| 22 | 212443 | ブラケット | BRACKET | 1 |
| 23 | 5276 | 六角ネジ／C 7 | SCREW | 2 |
| 24 | 303067 | バネ座金 | SPRING WASHER | 2 |
| 25 | 5426 | 六角ナット／C 7 | NUT | 2 |
| 26 | 212444 | ネジリバネ | SPRING | 1 |
| 27 | 5534 | 平ネジ／C 8 | SCREW | 1 |
| 28 | 470 | 鎖 | CHAIN | 1 |
| 29 | 471 | 鎖 | CHAIN | 1 |
| 30 | 9030 | ボルト（セット） | BOLT SET | 1 |
| 31 | 272 | キーレンチ／6MM | ALLEN KEY/6MM | 1 |

www.college-sewing.co.uk

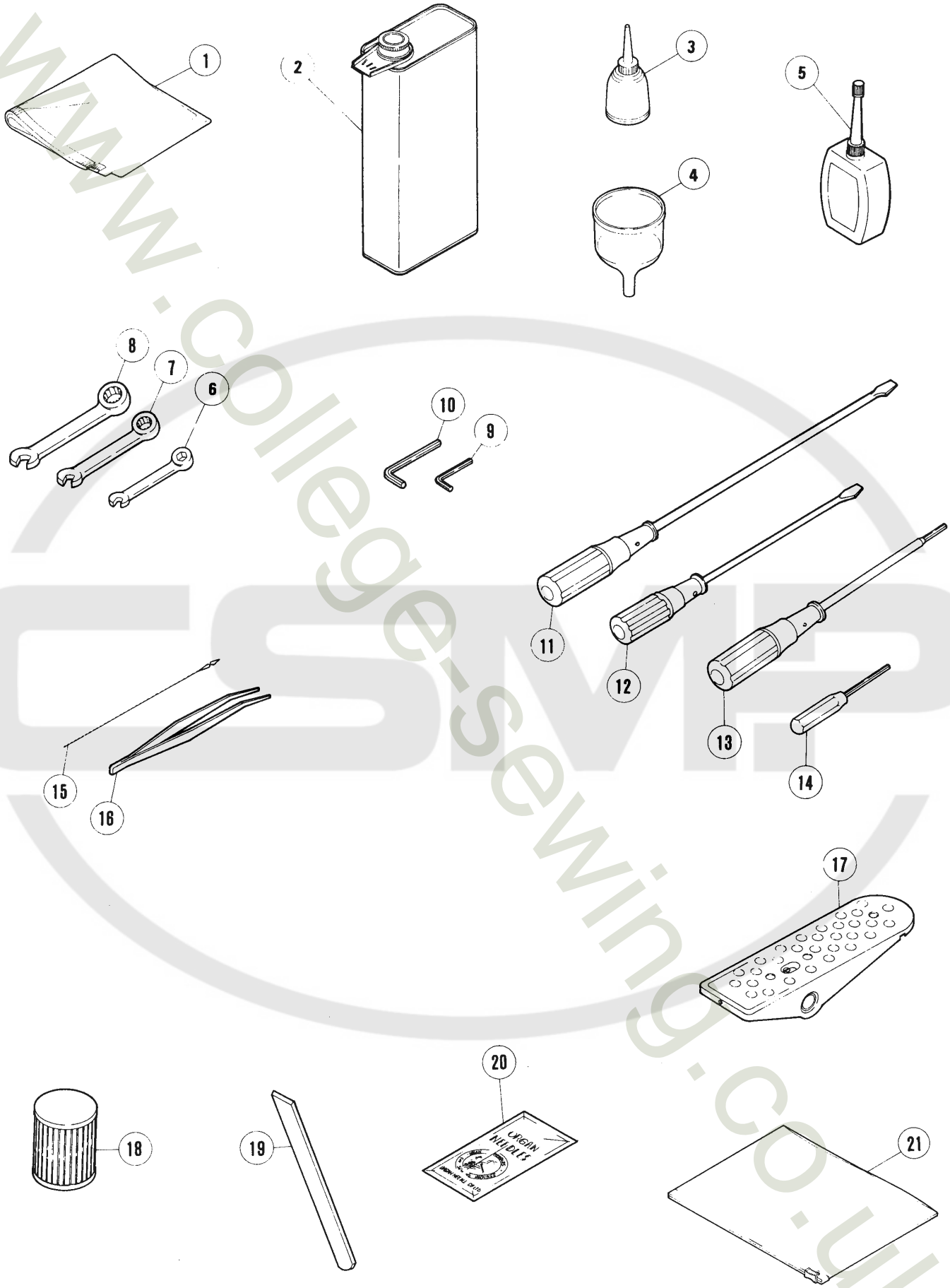


www.college-sewing.co.uk

| REF. NO. | PART NO. 部品番号 | 名　称 | NAME |
|---|---|---|---|
| 1 | 908 | ナイロンカバー（中） | DUST COVER |
| 2 | 453 | 油缶／１０００ＣＣ | OIL CONTAINER/1000CC |
| 3 | 485 | 油差シ | OILER |
| 4 | 484 | ジョウゴ | OIL FUNNEL |
| 5 | 178 | シリコンオイル／５０ＣＣ | CONTAINER - SILICONE |
| 6 | 282 | スパナ／５ＭＭ | WRENCH/5MM |
| 7 | 284 | スパナ／７ＭＭ | WRENCH/7MM |
| 8 | 285 | スパナ／８ＭＭ | WRENCH/8MM |
| 9 | 322 | キーレンチ／２．３８ＭＭ | ALLEN KEY/2.38MM |
| 10 | 200 | キーレンチ／４．７６ＭＭ | ALLEN KEY/4.76MM |
| 11 | 127 | ドライバー（大） | SCREWDRIVER (LARGE) |
| 12 | 128 | ドライバー（中） | SCREWDRIVER (MEDIUM) |
| 13 | 414 | キーレンチドライバー | ALLEN KEY DRIVER/3.17MM |
| 14 | 179 | キーレンチドライバー | ALLEN KEY DRIVER |
| 15 | 153 | 糸通シ具 | THREADING WIRE |
| 16 | 131 | ピンセット | TWEEZERS |
| 17 | 478 | ペダル | PEDAL |
| 18 | 206233 | エレメント | OIL FILTER |
| 19 | 202295 | 下メス／厚メス | LOWER KNIFE/THICK |
| 20 | XXXXXX | 針 | NEEDLE |
| 21 | 482 | アクセサリーバッグ | ACCESSORY BAG |

××××××は、54～75頁参照。
See pages 54～75 for ××××××.

www.college-sewing.co.uk

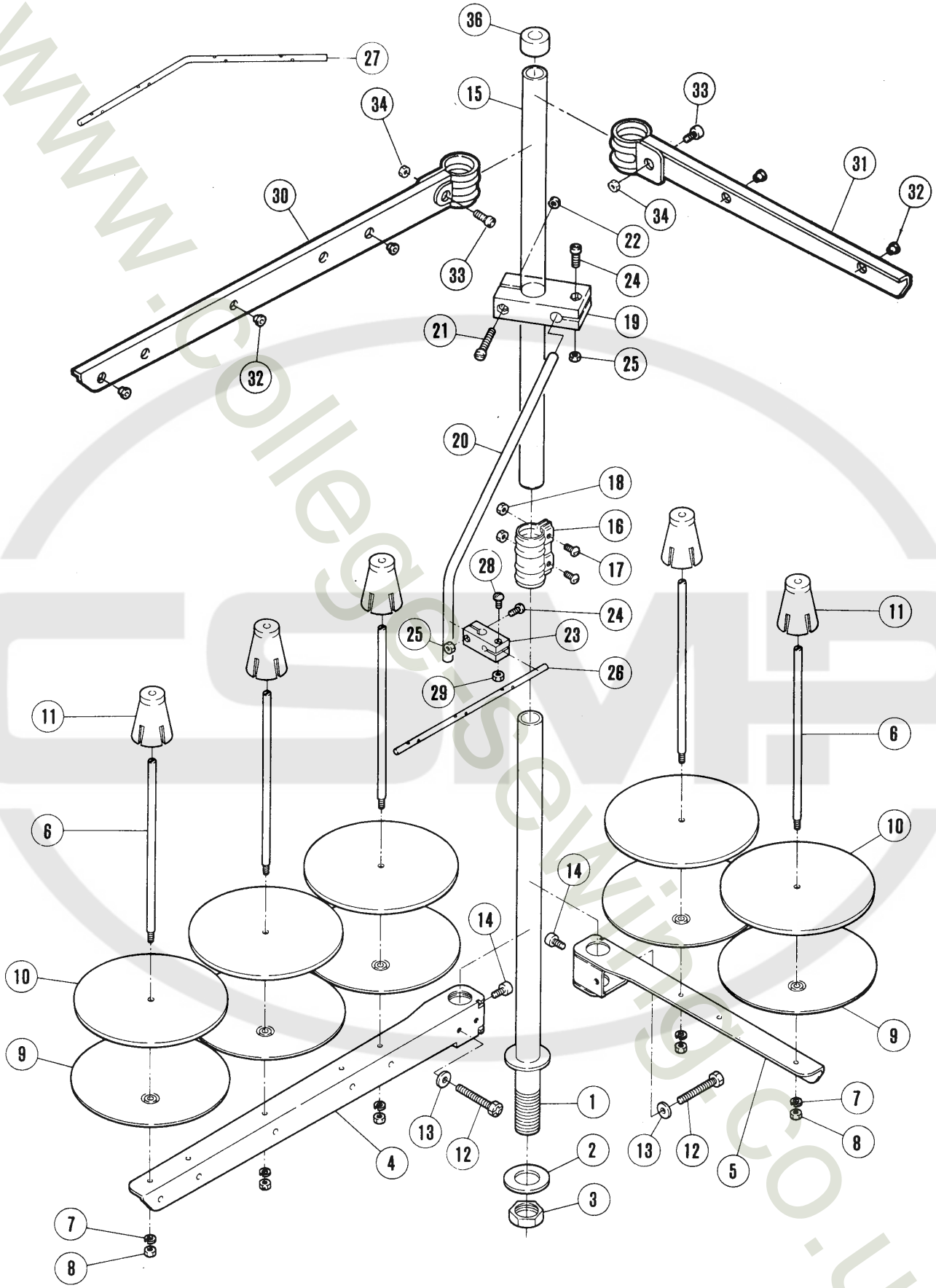


www.collegesewing.co.uk

# 糸立台 THREAD STAND

| REF. NO. | PART NO. 部品番号 | 名　称 | NAME | QT. | |
|---|---|---|---|---|---|
| | 486B9C | 糸立（組）（４本立） | THREAD STAND ASS. (4-SPOOLS) | 1 | |
| | 486C9C | 糸立（組）（３本立） | THREAD STAND ASS. (3-SPOOLS) | | 1 |
| 1 | 503-CA | スタンド棒（下） | THREAD STAND ROD (LOWER) | 1 | 1 |
| 2 | 509 | 座金 | WASHER | 1 | 1 |
| 3 | 5476 | 六角ナット | NUT | 1 | 1 |
| 4 | 505-CA | ブラケット（３本立） | BRACKET | | 1 |
| 5 | 505ACA | ブラケット（２本立） | BRACKET | 2 | |
| 6 | 380A | 糸立棒 | SPOOL PIN | 4 | 3 |
| 7 | 201252 | バネ座金 | SPRING WASHER | 4 | 3 |
| 8 | 4803 | 六角ナット／Ｍ４ | NUT | 4 | 3 |
| 9 | 381-CA | 受皿 | SPOOL TRAY | 4 | 3 |
| 10 | 507 | ウレタン | CUSHION | 4 | 3 |
| 11 | 382-CA | ユレ止メ | SPOOL RETAINING FIN | 4 | 3 |
| 12 | 7102 | 六角ネジ／Ｍ６ | SCREW | 2 | 1 |
| 13 | 512 | 座金 | WASHER | 2 | 1 |
| 14 | 4022 | 平ネジ／Ｍ６ | SCREW | 2 | 1 |
| 15 | 502-CA | スタンド棒（上） | THREAD STAND ROD (UPPER) | 1 | 1 |
| 16 | 504-CA | ジョイント | JOINT | 1 | 1 |
| 17 | 4021 | 平ネジ／Ｍ５ | SCREW | 2 | 2 |
| 18 | 4805 | 六角ナット／Ｍ５ | NUT | 2 | 2 |
| 19 | 383-CA | ブラケット | BRACKET | 1 | 1 |
| 20 | 384 | 糸道棒腕 | THREAD GUIDE BAR ROD | 1 | 1 |
| 21 | 4014 | 平ネジ／Ｍ４ | SCREW | 1 | 1 |
| 22 | 4803 | 六角ナット／Ｍ４ | NUT | 1 | 1 |
| 23 | 233-CA | ホルダー | HOLDER | 1 | 1 |
| 24 | 4012 | 平ネジ／Ｍ４ | SCREW | 2 | 2 |
| 25 | 4803 | 六角ナット／Ｍ４ | NUT | 2 | 2 |
| 26 | 293C | 糸道棒（３本立） | THREAD GUIDE BAR (3-SPOOLS) | | 1 |
| 27 | 293B | 糸道棒（４本立） | THREAD GUIDE BAR (4-SPOOLS) | 1 | |
| 28 | 4012 | 平ネジ／Ｍ４ | SCREW | 1 | 1 |
| 29 | 4803 | 六角ナット／Ｍ４ | NUT | 1 | 1 |
| 30 | 505-CA | ブラケット（３本立） | BRACKET | | 1 |
| 31 | 505ACA | ブラケット（２本立） | BRACKET | 2 | |
| 32 | 506 | 糸目穴 | THREAD EYELET | 4 | 3 |
| 33 | 4117 | 平ネジ／Ｍ５ | SCREW | 2 | 1 |
| 34 | 4805 | 六角ナット／Ｍ５ | NUT | 2 | 1 |
| 36 | 386 | キャップ | ROD CAP | 1 | 1 |

www.college-sewing.co.uk

# ETS52-186FA2/504-393-W
# ETS52-186AFA2/504-363-W
# ETS52-187FA2/514-393-W
# ETS52-188FB2/514-493-W

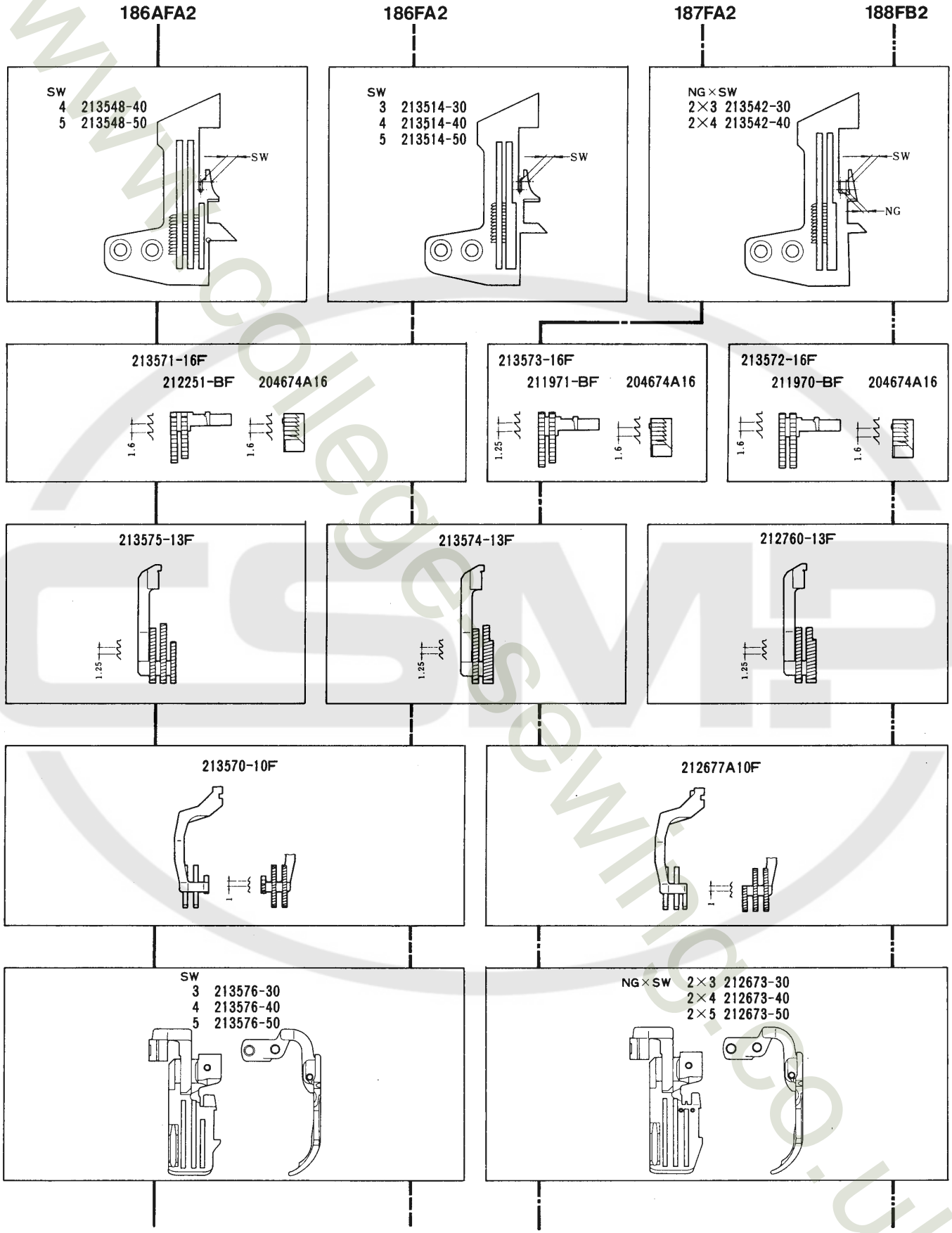


NG＝NEEDLE GAUGE 針巾
SW＝SEAM WIDTH 縫巾

www.collegesewing.co.uk

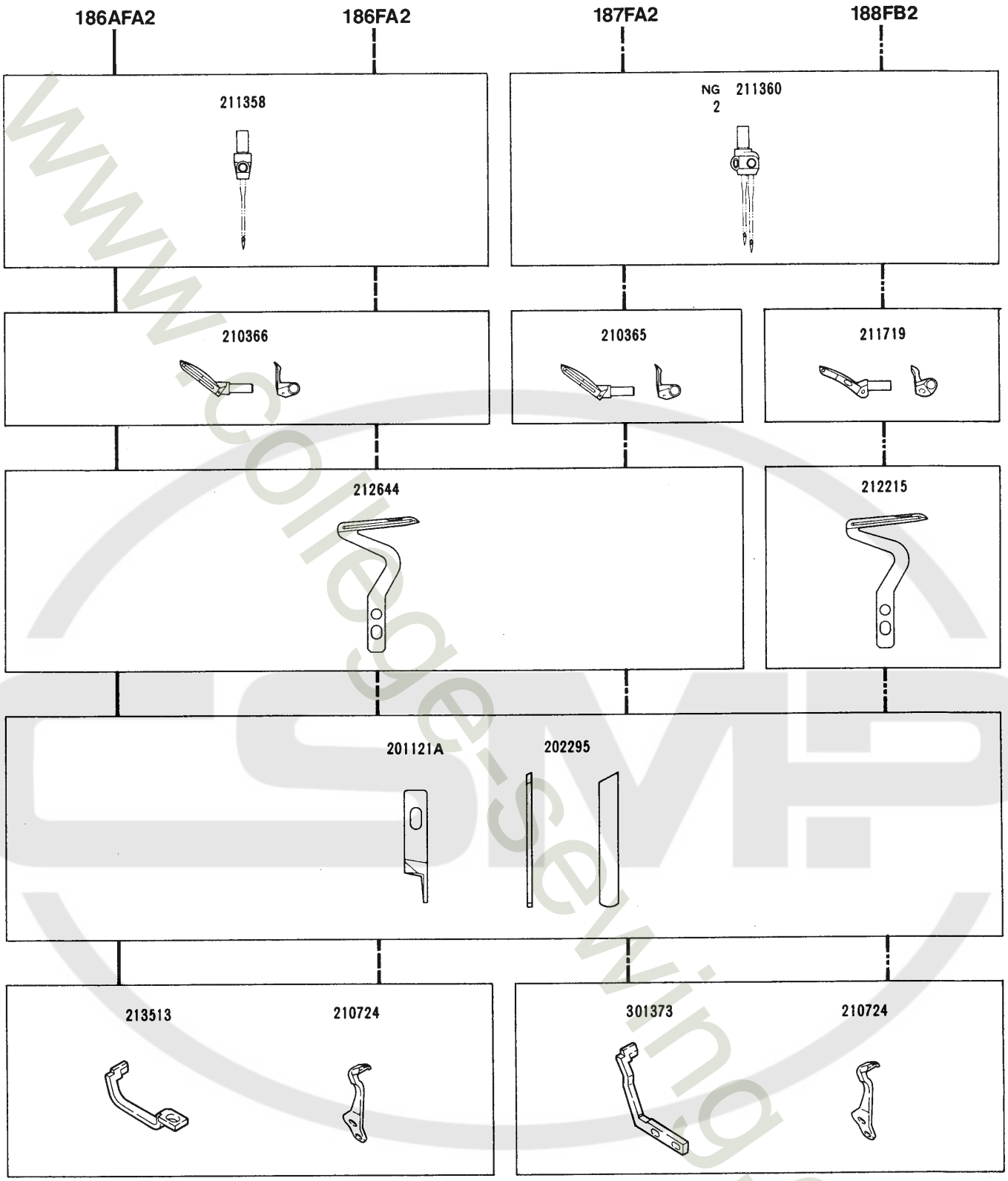


| | | | | | | | | | |
|---|---|---|---|---|---|---|---|---|---|
| ETS52-186FA2 /504-393-W | | 3,4,5 | 3.8 | 0.75~1.5 | 0.7~2 | 5,500 | H | BL裝置搭載機種 | Used for BL |
| ETS52-186AFA2 /504-363-W | | 3,4,5 | 〃 | 〃 | 〃 | 〃 | 〃 | 〃 | 〃 |
| ETS52-187FA2 /514-393-W | 2 | 3,4,5 | 〃 | 〃 | 〃 | 〃 | 〃 | 〃 | 〃 |
| ETS52-188FB2 /514-493-W | 2 | 3,4,5 | 〃 | 1.2~3.6 | 1.1~3.2 | 4,500 | EH | 〃 | 〃 |

www.college-sewing.co.uk

# ETS52-130FA2/504-363-N
# ETS52-133FA2/514-363-N
# ETS52-141FA2/504-463-W
# ETS52-142FA2/514-463-W

# ETS52-130FA3/504-363-N
# ETS52-133FA3/514-363-N
# ETS52-141FA3/504-463-W
# ETS52-142FA3/514-463-W

141FA2 130FA2 142FA2 133FA2 142FA3 133FA3 141FA3 130FA3

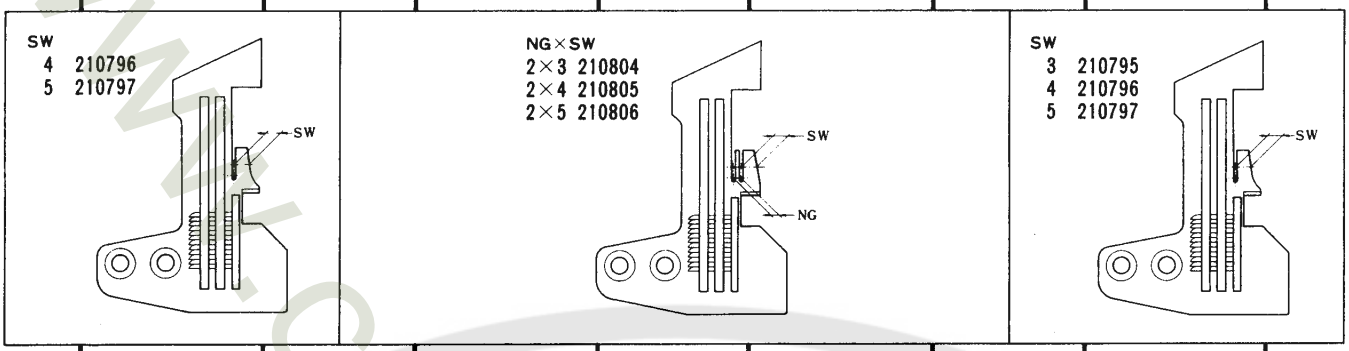


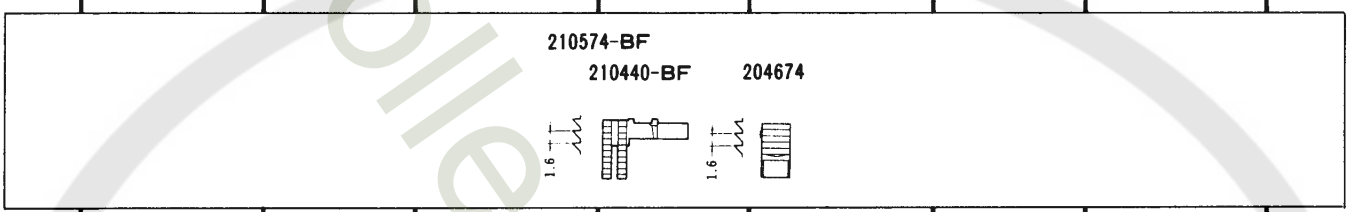


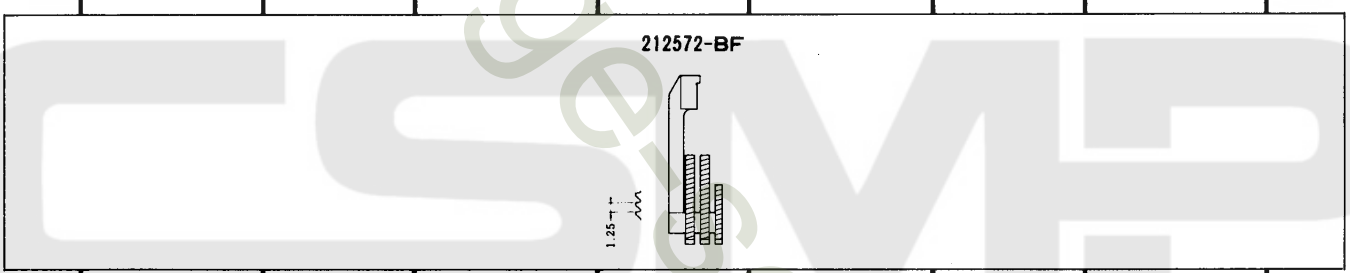


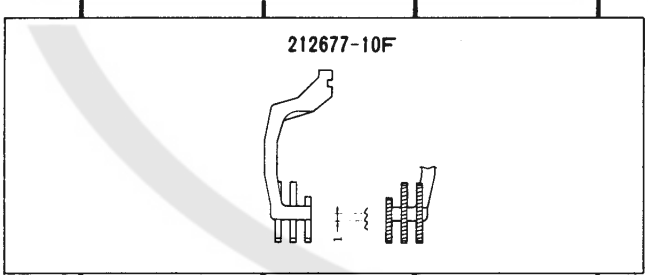


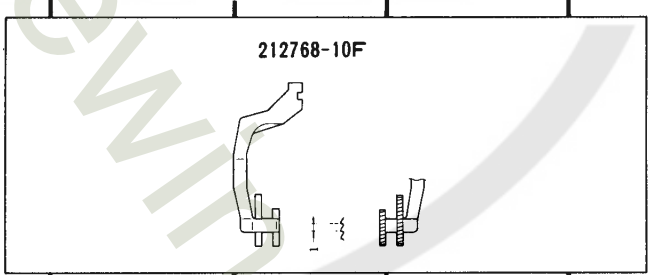


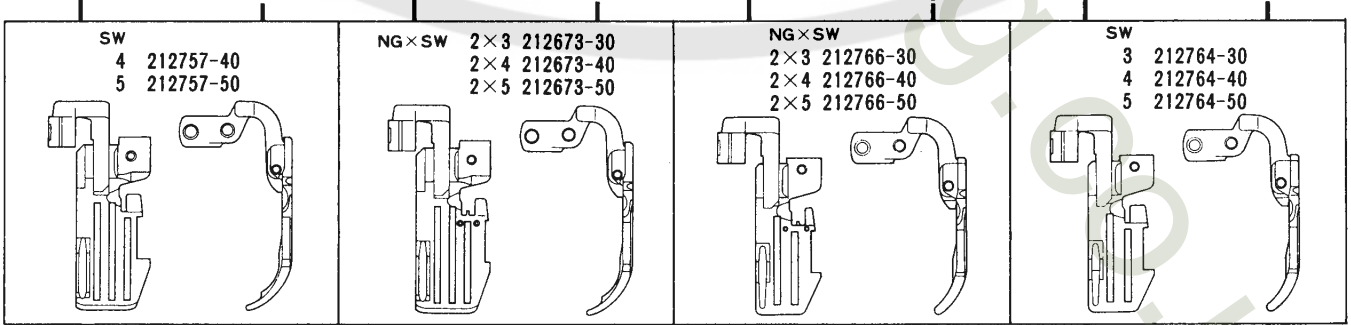


141FA2 141FA3 130FA2 130FA3 142FA2 142FA3 133FA2 133FA3

www.collegesewing.co.uk

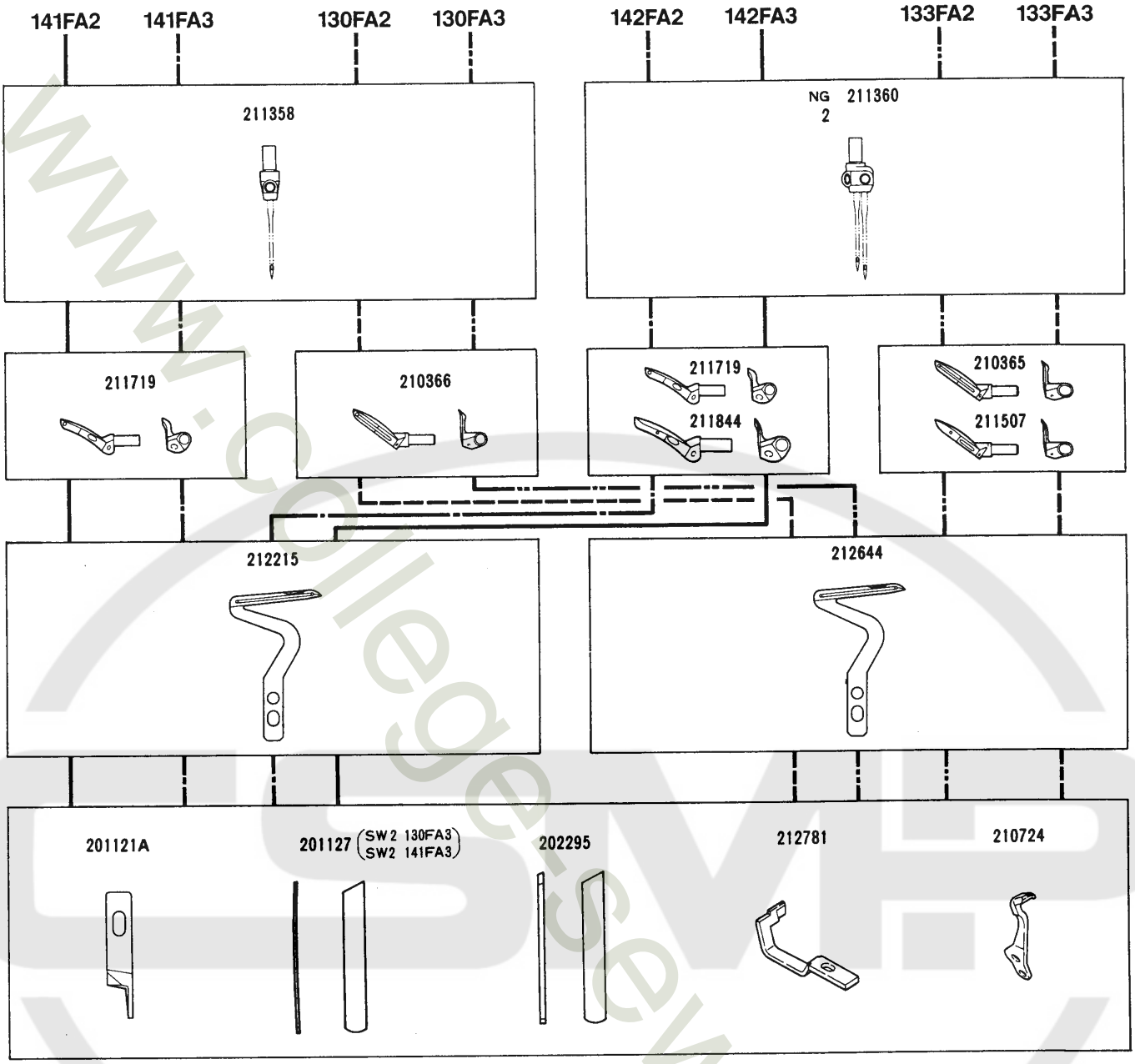


## 地縫・テープ付 SEAMING・ATTACHING TAPE

| | | | | | | | | |
|---|---|---|---|---|---|---|---|---|
| ETS52-141FA2 /504-463-W | | 4,5 | 3.8 | 0.7～1.5 | 0.7～2 | 6,000 | 中厚～厚物用 ・トレーニングウェア | Medium to heavy fabrics. Sportswear |
| ETS52-130FA2 /504-363-N | | 4,5 | 〃 | 〃 | 〃 | 〃 | 薄～中厚物用 ・スポーツウェア | Light to medium fabrics. Sportswear |
| ETS52-142FA2 /514/512-463-W | 2 | 3,4,5 | 〃 | 〃 | 〃 | 〃 | 中厚～厚物用 ・トレーニングウェア、子供服 | Medium to heavy fabrics. Sportswear, childrens' wear |
| ETS52-133FA2 /514/512-363-N | 2 | 3,4,5 | 〃 | 〃 | 〃 | 〃 | 薄～中厚物用 ・スポーツシャツ | Light to medium fabrics. Sports shirts |

## 地縫 SEAMING

| | | | | | | | | | |
|---|---|---|---|---|---|---|---|---|---|
| ETS52-141FA3 /504-463-N | | 3,4,5 | 3.8 | 0.7～1.5 | 0.7～2 | 6,000 | EH | 中厚～厚物用 ・トレーニングウェア | Medium to heavy fabrics. Sportswear |
| ETS52-130FA3 /504-363-N | | 3,4,5 | 〃 | 〃 | 〃 | 〃 | HI | 薄～中厚物用 ・スポーツウェア | Light to medium fabrics. Sports shirts |
| ETS52-142FA3 /514/512-463-W | 2 | 3,4,5 | 〃 | 〃 | 〃 | 〃 | EH | 中厚～厚物用 ・トレーニングウェア、子供服 | Medium to heavy fabrics. Sportswear, childrens' wear |
| ETS52-133FA3 /514/512-363-N | 2 | 3,4,5 | 〃 | 〃 | 〃 | 〃 | HI | 薄～中厚物用 ・スポーツシャツ | Light to medium fabrics. Sports shirts |

www.college-sewing.co.uk

ETS52-243FD2/514-463-W/KL100
ETS52-245FD2/514-363-W/KL100

ETS52-243FD3/514-463-W/KL100
ETS52-245FD3/514-363-W/KL100
ETS52-243FD4/P1(P2)/514-463-W/KL100

243FD2 245FD2 243FD3 245FD3 243FD4

NG×SW
2×3 210804
2×4 210805
2×5 210806

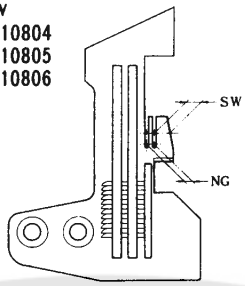


210574-BF
210440-BF 204674

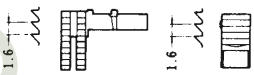


212572-BF

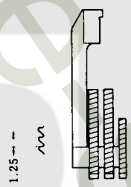


212677-10F

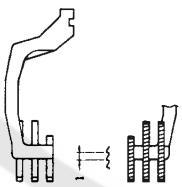


212768-10F

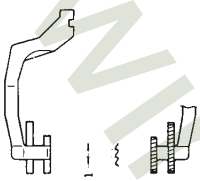


NG×SW 2×3 212673A30
2×4 212673A40
2×5 212673A50

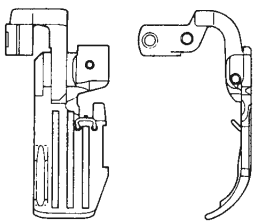

NG×SW
2×3 212766A30
2×4 212766A40
2×5 212766A50

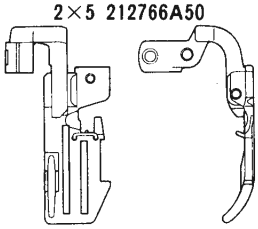

NG×SW
2×3 212766-30
2×4 212766-40
2×5 212766-50

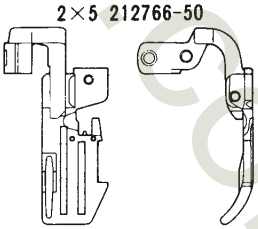

www.collegesewing.co.uk

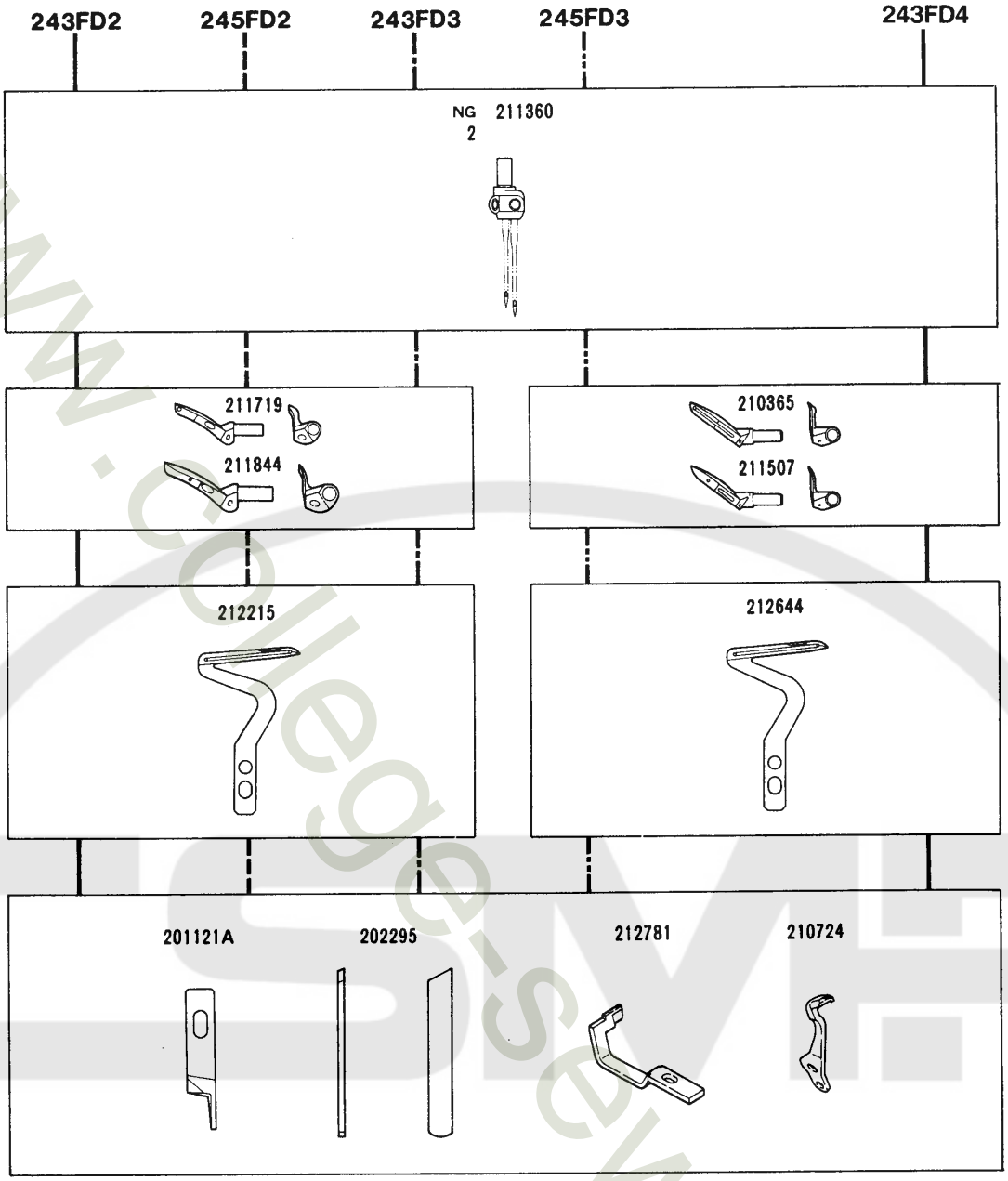


## ギャザリング GATHERING

| | | | | | | | | | |
|---|---|---|---|---|---|---|---|---|---|
| ETS52-243FD2 /514/512-463-W/KL100 | 2 | 3,4,5 | 3.8 | 0.7～1.9 | 0.7～2 | 5,500 | EX | 中厚～厚物用<br>・カーテン、子供服 | Medium to heavy fabrics.<br>Curtains, childrens' wear |
| ETS52-245FD2 /514/512-363-W/KL100 | 2 | 3,4,5 | 〃 | 〃 | 〃 | 〃 | HI | -243FD2よりも薄物用です。<br>・カーテン、子供服 | Operations lighter than -243FD2.<br>Curtains, childrens' wear |
| ETS52-243FD3 /514/512-463-W/KL100 | 2 | 3,4,5 | 3.8 | 0.7～1.9 | 0.7～2 | 5,000 | EX | 中厚～厚物用<br>・カーテン、子供服 | Medium to heavy fabrics.<br>Curtains, childrens' wear |
| ETS52-245FD3 /514/512-363-W/KL100 | 2 | 3,4,5 | 〃 | 〃 | 〃 | 〃 | HI | -243FD2よりも薄物用です。<br>・カーテン、子供服 | Operations lighter than -243FD2.<br>Curtains, childrens' wear |

## ギャザリング・パイピング GATHERING・PIPING

| | | | | | | | | | |
|---|---|---|---|---|---|---|---|---|---|
| ETS52-243FD4/P1(P2) /514/512-463-W/KL100 | 2 | 3,4,5 | 3.8 | 0.7～2 | 0.7～2 | 5,500 | EX | カーテン、子供服 | Curtains, childrens' wear |

www.college-sewing.co.uk

ETS52-142FB2/S1/514-463-W
ETS52-142FB2/S2/514-463-W/KL100

ETS52-253FB2/S1/514-493-W
ETS52-253FB2/S2/514-493-W/KL100
ETS52-253FB2K/S1/514-493-W
ETS52-253FB2K/S2/514-493-W/KL100

142FB2 | 253FB2 | 253FB2K

NG×SW
2×3 210804
2×4 210805
2×5 210806

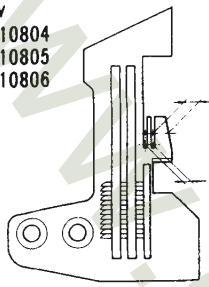


NG×SW
2×3 212730-30
2×4 212730-40
2×5 212730-50

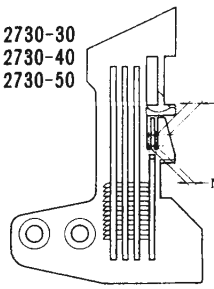


NG×SW
2.5×2.5 212731-25
2.5×3.5 212731-35
2.5×4.5 212731-45

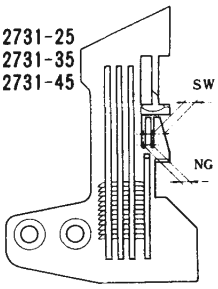


NG×SW
3×4 212774-40
3×5 212774-50

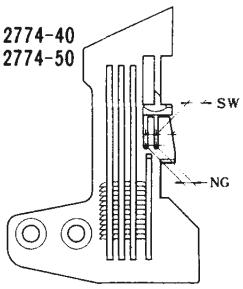


210574-BF
210440-BF 204674

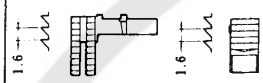


213567-16F
213568-16F 208095

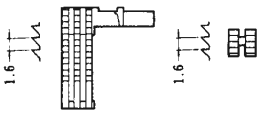


212572-BF

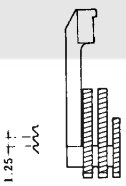


213550-13F

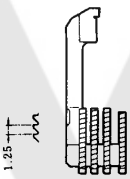


212677-10F

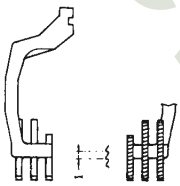

NG×SW 2×3 212673A30
2×4 212673A40
2×5 212673A50

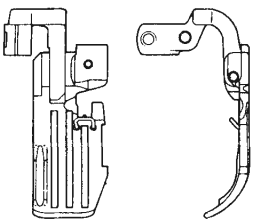

NG×SW
2×3 212673B30
2×4 212673B40
2×5 212673B50

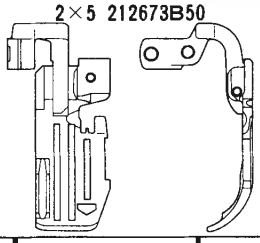

NG×SW
2.5×2.5 212778B25
2.5×3.5 212778B35
2.5×4.5 212778B45
3×4 212778B45
3×5 212778B45

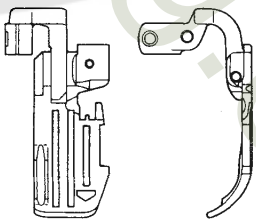

www.college-sewing.co.uk

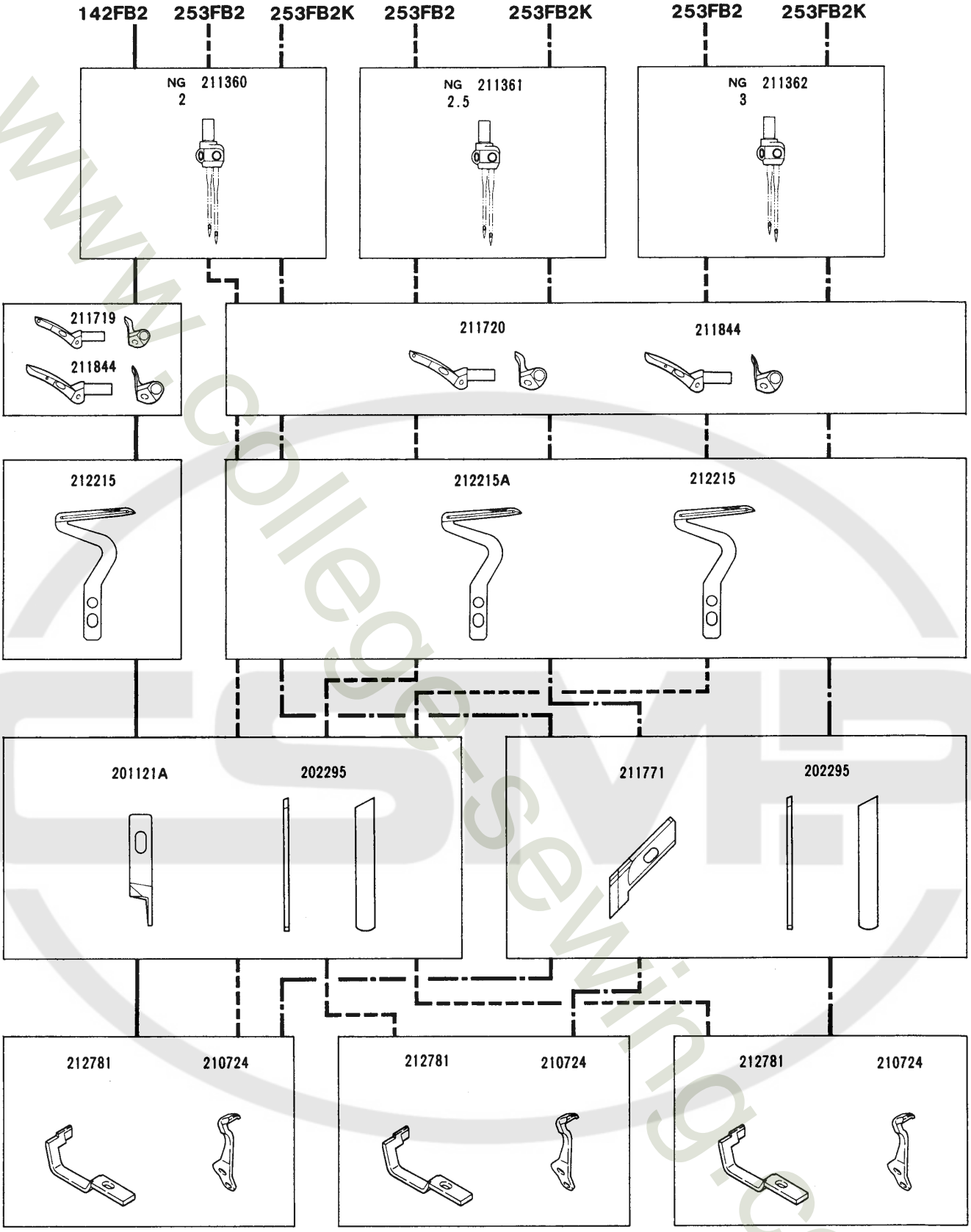


## 地縫・テープ付

## SEAMING・ATTACHING TAPE

| | | | | | | | | |
|---|---|---|---|---|---|---|---|---|
| ETS52-142FB2/S1(S2) /514/512-463-W | 2 | 3,4,5 | 2.4 | 1.2～3.6 | 1.1～3.2 | 5,000 | 中厚～厚物用<br>・セーター、トレーニングウェア | Medium to heavy fabrics.<br>Sweater, sports wear |
| ETS52-253FB2/S1(S2) /514/512-493-W | 2<br>2.5<br>3 | 3,4,5<br>2.5,3.5,4.5<br>4,5 | 3.2 | 0.8～2.6 | 0.8～2.8 | 5,000 | テープ付。中厚～厚物用<br>・セーター、トレーニングウェア | Attaching tape. Medium to heavy.<br>Sweaters, sportswear |
| ETS52-253FB2K/S1(S2) /514/512-493-W | 2<br>2.5<br>3 | 3,4,5<br>2.5,3.5,4.5<br>4,5 | 〃 | 〃 | 〃 | 〃 | ·253FB2と同じ用途ですが、角メスが付いています。 | Same applications as ·253FB2 but with an angled upper knife. |

ETS52-350BC2/P1(P2)/504-453-W
ETS52-351BC2/P1(P2)/514-453-W

ETS52-350FC2/P1(P2)/504-453-W
ETS52-351FC2/P1(P2)/514-453-W
ETS52-352FC2/P1(P2)/514-353-W

350BC2 350FC2 351BC2 351FC2 352FC2

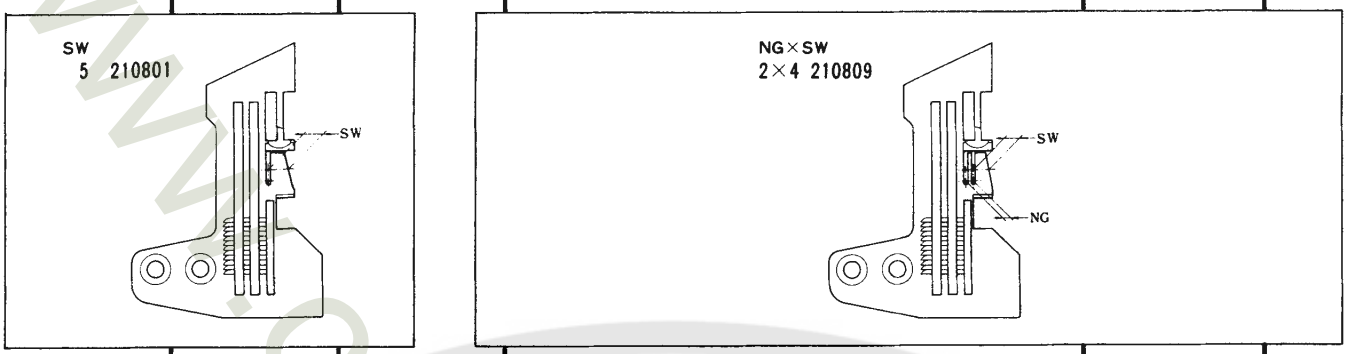





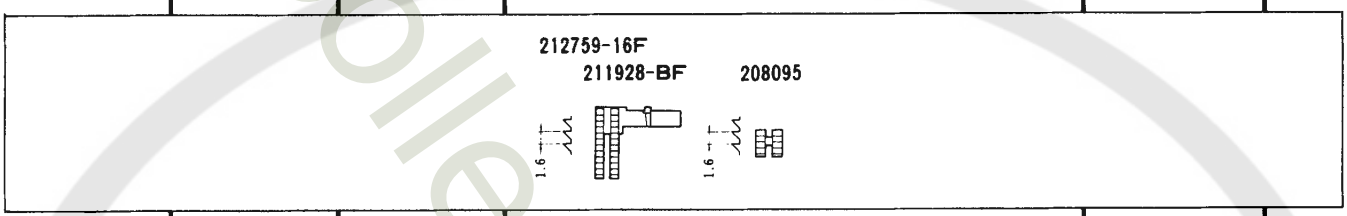


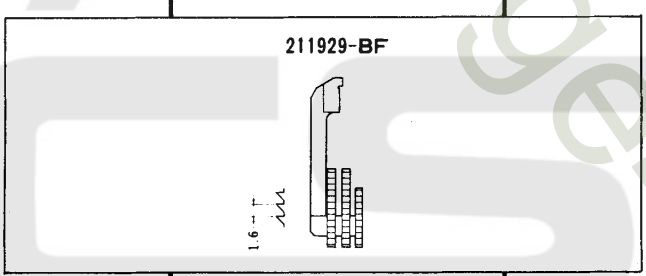


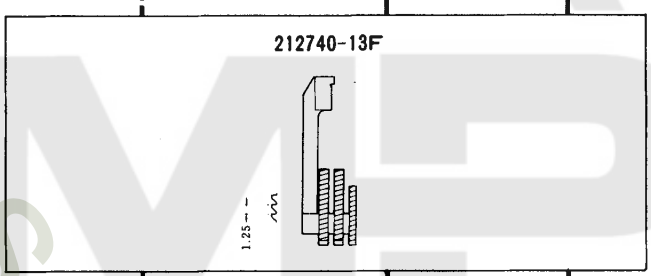


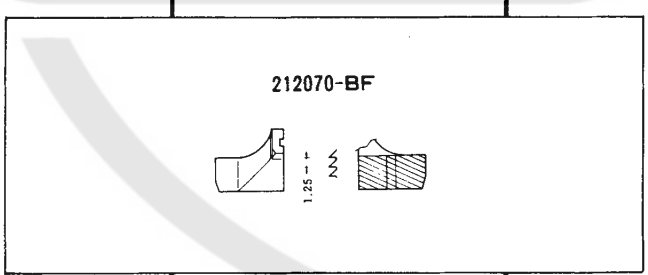


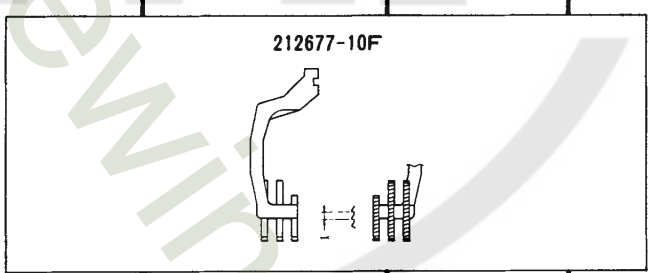


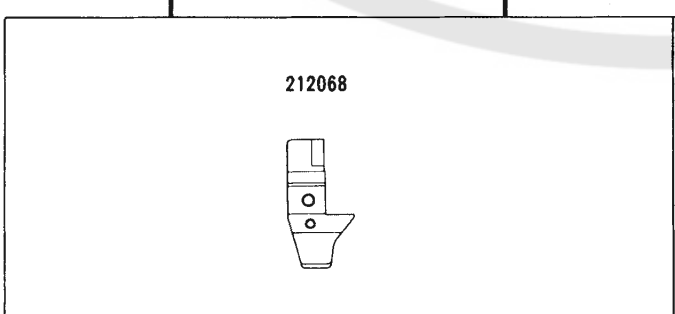


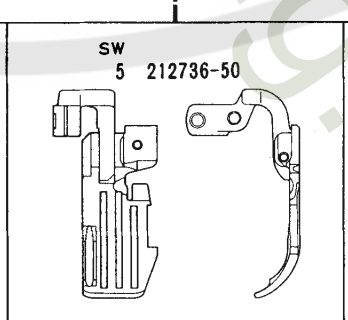


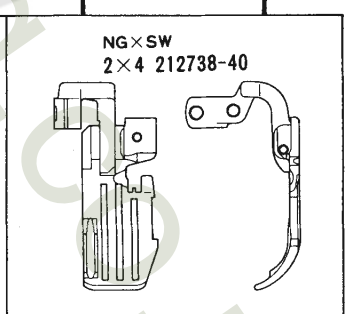


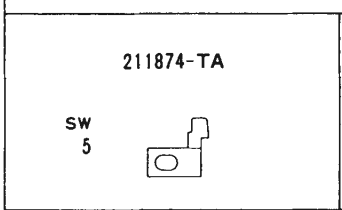


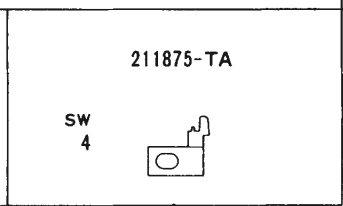


www.college-sewing.co.uk

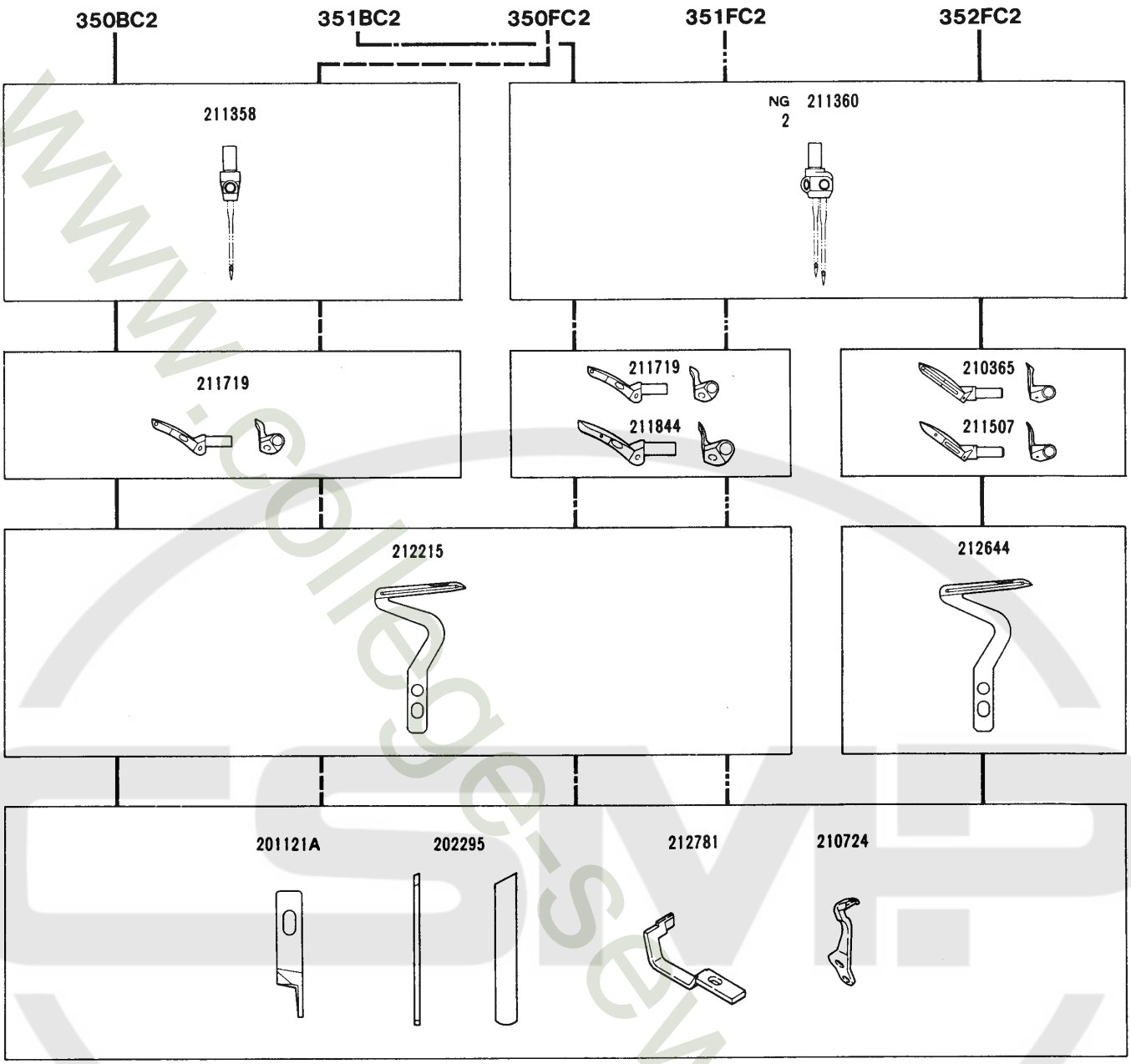


## パイピング　PIPING

| | | | | | | | | | |
|---|---|---|---|---|---|---|---|---|---|
| ETS52-350BC2/P1(P2) /504-453-W | | 5 | 3.8 | 0.7～1.5 | 0.7～2 | 6,000 | EX | ジーンズ | Jeans |
| ETS52-351BC2/P1(P2) /514 512-453-W | 2 | 4 | 〃 | 〃 | 〃 | 〃 | EX | トレーニングウェア<br>ジーンズ | Sportswear<br>Jeans |

## パイピング　PIPING

| | | | | | | | | |
|---|---|---|---|---|---|---|---|---|
| ETS52-350FC2/P1(P2) /504-453-W | | 5 | 3.8 | 0.7～1.5 | 0.7～2 | 6,000 | ・トレーニングウェア、カジュアルウェア | Sportswear, casual wear |
| ETS52-351FC2/P1(P2) /514 512-453-W | 2 | 4 | 〃 | 〃 | 〃 | 〃 | 中厚～厚物用<br>・トレーニングウェア、カジュアルウェア | Medium to heavy fabrics.<br>Sportswear, casual wear |
| ETS52-352FC2/P1(P2) /514 512-353-W | 2 | 4 | 〃 | 〃 | 〃 | 〃 | ·351FC2よりも薄物用です。<br>・カーテン、子供服 | Operations lighter than ·351FC2.<br>Curtains, childrens' wear |

www.college-sewing.co.uk

# ETS52-210FE3/505-323-N

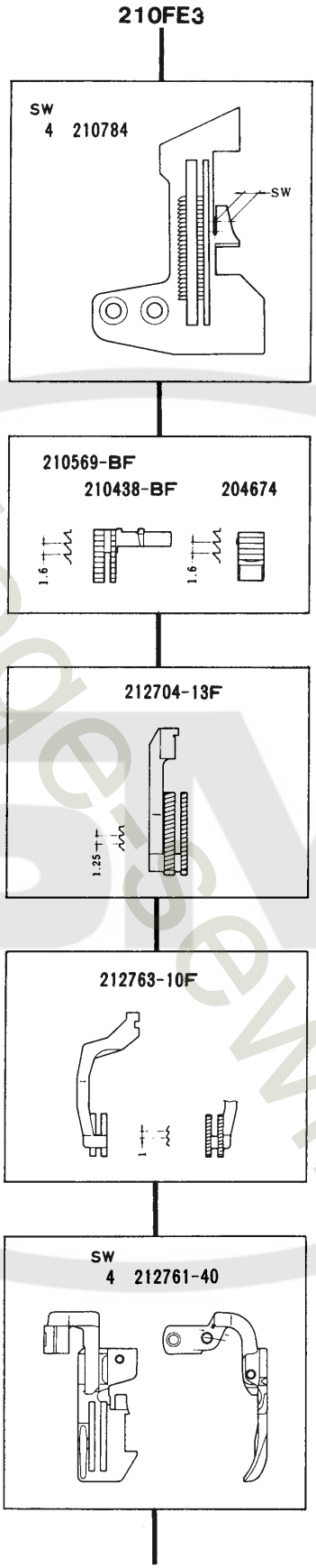


www.college-sewing.co.uk

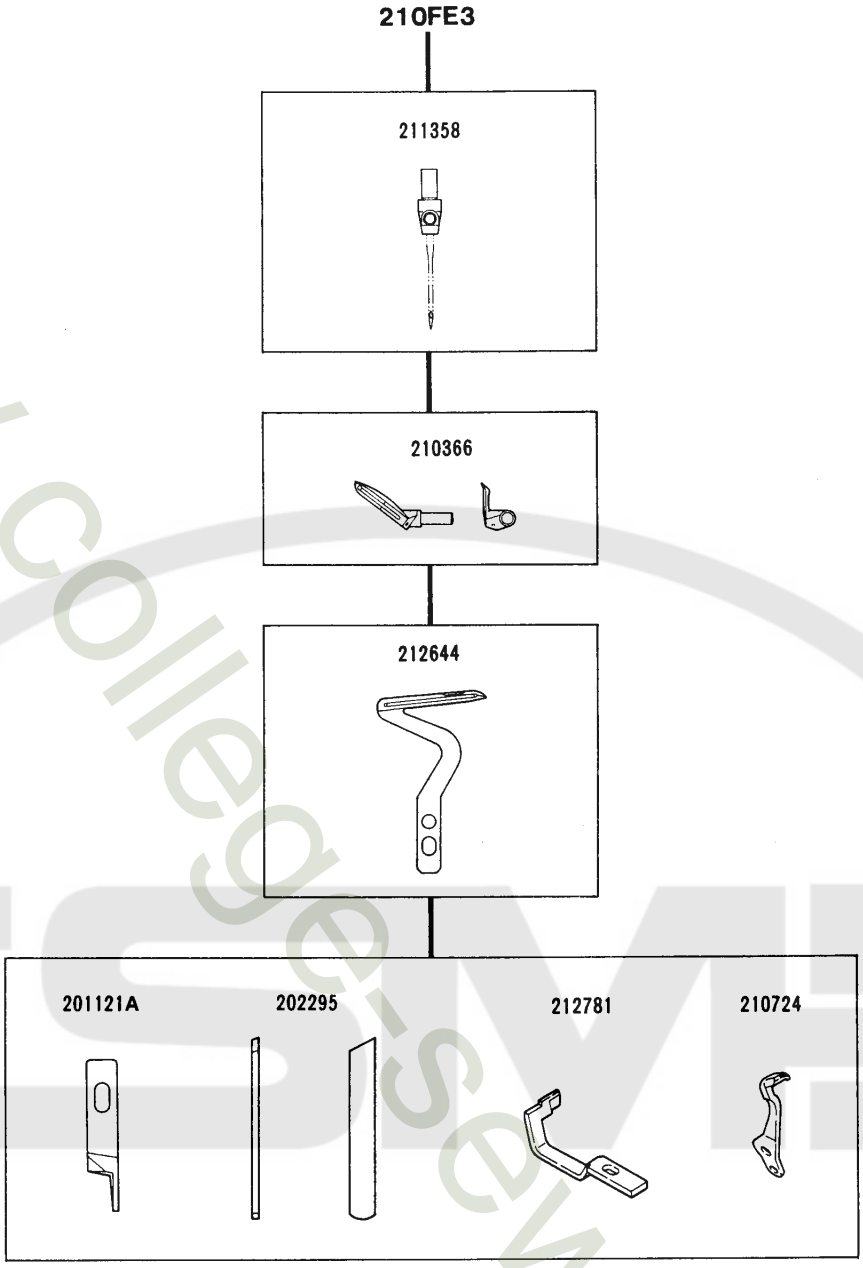


裾引

**BLINDHEMMING**

| | | | | | | | | | |
|---|---|---|---|---|---|---|---|---|---|
| **ETS52-210FE3 /505-323-N** | | 4 | 3.8 | 0.7～1.5 | 0.7～2 | 6,000 | HI | 肌着、Tシャツ | Underwear, T-shirts |

www.college-sewing.co.uk

# ETS52-141BA2/504-463-W
# ETS52-142BA2/514-463-W

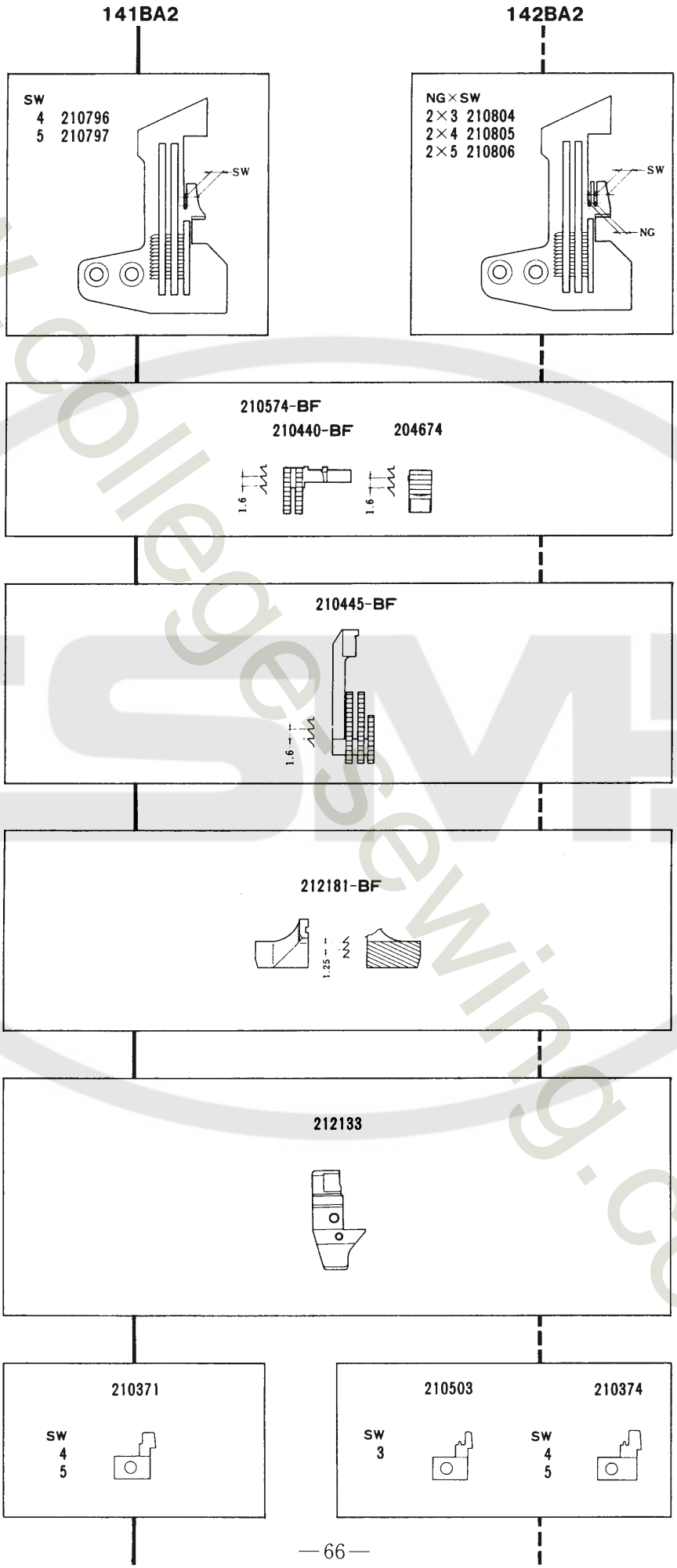


www.collegesewing.co.uk

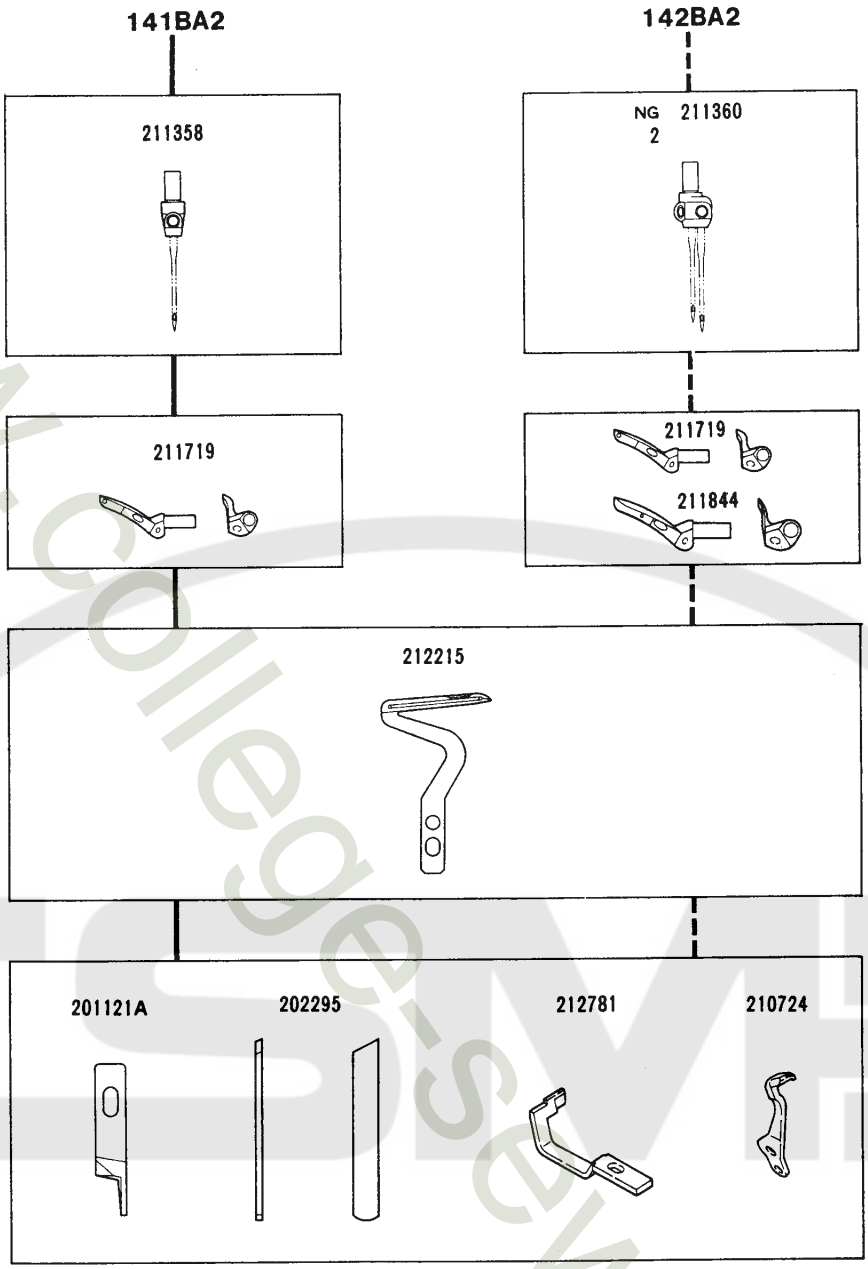


地縫・サージング(厚物用)

SEAMING•SERGING (Heavy to extra-heavy)

| | | | | | | | | | |
|---|---|---|---|---|---|---|---|---|---|
| ETS52-141BA2 /504-463-W | | 4,5 | 3.8 | 0.7～1.5 | 0.7～2 | 6,000 | EX | ジーンズ | Jeans |
| ETS52-142BA2 /514 512-463-W | 2 | 3,4,5 | 〃 | 〃 | 〃 | 〃 | EX | ジーンズ | Jeans |

www.college-sewing.co.uk

# ETS52 ゲージパーツ表 (1)
(BL装置搭載機種)

# ETS52 GAUGE PARTS LIST (1)
(USED FOR BL)

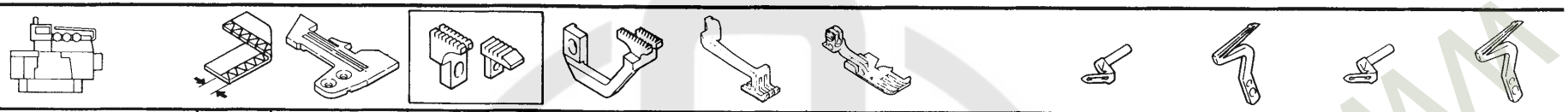

| ミシンケイシキ ショウ | ゲージ NG | ゲージ SW | ハリイタ | シュオクリバ (クミ) | サドウオクリバ | ウワオクリバ | オサエ | オサエヅメ | ウワルーパー | シタルーパー | ウワルーパー FOR 512 | シタルーパー ONLY |
|---|---|---|---|---|---|---|---|---|---|---|---|---|
| MACHINE TYPE SPEC. | GAUGE NG | GAUGE SW | NEEDLE PLATE | MAIN FEED DOG COMP. | DIFF. FEED DOG | TOP FEED DOG | PRESSER BODY | FOOT FINGER | UPPER LOOPER | LOWER LOOPER | UPPER LOOPER | LOWER LOOOER |
| ETS52-186FA2 /504-393-W | | 3 | 213514-30 | 213571-16F | 213574-13F | 213570-10F | 213576-30 | ------ | 210366 | 212644 | ------ | ------ |
| | | 4 | " -40 | " | " | " | " -40 | ------ | " #26 | " | ------ | ------ |
| | | 5 | " -50 | " | " | " | " -50 | ------ | " | " | ------ | ------ |
| ETS52-186AFA2 /504-363-W | | 4 | 213548-40 | 213571-16F | 213575-13F | 213570-10F | 213576-40 | ------ | 210366 | 212644 | ------ | ------ |
| | | 5 | " -50 | " | " | " | " -50 | ------ | " #26 | " | ------ | ------ |
| ETS52-187FA2 /514-393-W | 2 | 3 | 213542-30 | 213573-16F | 213574-13F | 212677-10F | 212673-30 | ------ | 210365 | 212644 | ------ | ------ |
| | 2 | 4 | " -40 | " | " | " | " -40 | ------ | " #24 | " | ------ | ------ |
| ETS52-188FB2 /514-493-W | 2 | 3 | 213542-30 | 213572-16F | 212760-13F | 212677-10F | 212673-30 | ------ | 211719 | 212215 | ------ | ------ |
| | 2 | 4 | " -40 | " | " | " | " -40 | ------ | " #38 | " | ------ | ------ |

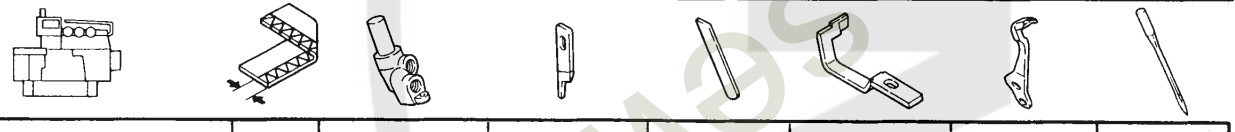

| ミシンケイシキ ショウ | ゲージ NG | ゲージ SW | ハリトメ | ウワメス | シタメス | ハリウケ (マエ) | ハリウケ (ウシロ) | ハリ |
|---|---|---|---|---|---|---|---|---|
| MACHINE TYPE SPEC. | GAUGE NG | GAUGE SW | NEEDLE HOLDER | UPPER KNIFE | LOWER KNIFE | NEEDLE (FRONT) | GUARD (REAR) | NEEDLE |
| ETS52-186FA2 /504-393-W | | 3 | 211358 | 201121A | 202295 | 213513 | 210724 | DCX27 #9 |
| | | 4 | " | " | " | " | " | |
| | | 5 | " | " | " | " | " | |
| ETS52-186AFA2 /504-363-W | | 4 | 211358 | 201121A | 202295 | 213513 | 210724 | DCX27 #9 |
| | | 5 | " | " | " | " | " | |
| ETS52-187FA2 /514-393-W | 2 | 3 | 211360 | 201121A | 202295 | 301373 | 210724 | DCX27 #9 |
| | 2 | 4 | " | " | " | " | " | |
| ETS52-188FB2 /514-493-W | 2 | 3 | 211360 | 201121A | 202295 | 301373 | 210724 | DCX27 #11 |
| | 2 | 4 | " | " | " | " | " | |



www.college-sewing.co.uk

# ETS52 ゲージパーツ表 (2)

# ETS52 GAUGE PARTS LIST (2)

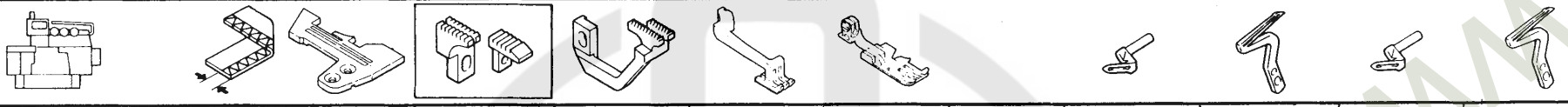

| ミシンケイシキ ショウ | ゲージ NG | ゲージ SW | ハリイタ | シユオクリハ (クミ) | サトウオクリハ | ウワオクリハ | オサエ | オサエツメ | ウワルーパー | シタルーパー | ウワルーパー FOR 512 | シタルーパー ONLY |
|---|---|---|---|---|---|---|---|---|---|---|---|---|
| MACHINE TYPE SPEC. | GAUGE NG | GAUGE SW | NEEDLE PLATE | MAIN FEED DOG COMP. | DIFF. FEED DOG | TOP FEED DOG | PRESSER BODY | FOOT FINGER | UPPER LOOPER | LOWER LOOPER | UPPER LOOPER | LOWER LOOPER |
| ETS52-130FA2 | | 4 | 210796 | 210574-BF | 212572-BF | 212677-10F | 212757-40 | ------ | 210366 | 212644 | ------ | ------ |
| /504-363-N | | 5 | 210797 | " | " | " | " -50 | ------ | " #26 | " | ------ | ------ |
| ETS52-133FA2 | 2 | 3 | 210804 | 210574-BF | 212572-BF | 212677-10F | 212673-30 | ------ | 210365 | 212644 | 211507 | 212644 |
| /514-363-N | 2 | 4 | 210805 | " | " | " | " -40 | ------ | " #24 | " | " #36 | " |
| /512-363-N | 2 | 5 | 210806 | " | " | " | " -50 | ------ | " | " | " | " |
| ETS52-141FA2 | | 4 | 210796 | 210574-BF | 212572-BF | 212677-10F | 212757-40 | ------ | 211719 | 212215 | ------ | ------ |
| /504-463-W | | 5 | 210797 | " | " | " | " -50 | ------ | " #38 | " | ------ | ------ |
| ETS52-142FA2 | 2 | 3 | 210804 | 210574-BF | 212572-BF | 212677-10F | 212673-30 | ------ | 211719 | 212215 | 211844 | 212215 |
| /514-463-W | 2 | 4 | 210805 | " | " | " | " -40 | ------ | " #38 | " | " #42 | " |
| /512-463-W | 2 | 5 | 210806 | " | " | " | " -50 | ------ | " | " | " | " |

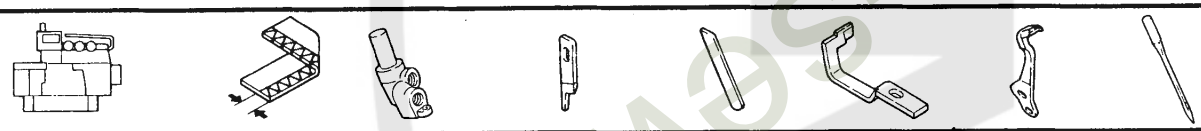

| ミシンケイシキ ショウ | ゲージ NG | ゲージ SW | ハリトメ | ウワメス | シタメス | ハリウケ (マエ) | ハリウケ (ウシロ) | ハリ |
|---|---|---|---|---|---|---|---|---|
| MACHINE TYPE SPEC. | GAUGE NG | GAUGE SW | NEEDLE HOLDER | UPPER KNIFE | LOWER KNIFE | NEEDLE (FRONT) | GUARD (REAR) | NEEDLE |
| ETS52-130FA2 | | 4 | 211358 | 201121A | 202295 | 212781 | 210724 | DCX27 |
| /504-363-N | | 5 | " | " | " | " | " | #9 |
| ETS52-133FA2 | 2 | 3 | 211360 | 201121A | 202295 | 212781 | 210724 | DCX27 |
| /514-363-N | 2 | 4 | " | " | " | " | " | #9 |
| /512-363-N | 2 | 5 | " | " | " | " | " | |
| ETS52-141FA2 | | 4 | 211358 | 201121A | 202295 | 212781 | 210724 | DCX27 |
| /504-463-W | | 5 | " | " | " | " | " | #11 |
| ETS52-142FA2 | 2 | 3 | 211360 | 201121A | 202295 | 212781 | 210724 | DCX27 |
| /514-463-W | 2 | 4 | " | " | " | " | " | #11 |
| /512-463-W | 2 | 5 | " | " | " | " | " | |



www.college-sewing.co.uk

# ETS52 ゲージパーツ表 (3)

# ETS52 GAUGE PARTS LIST (3)

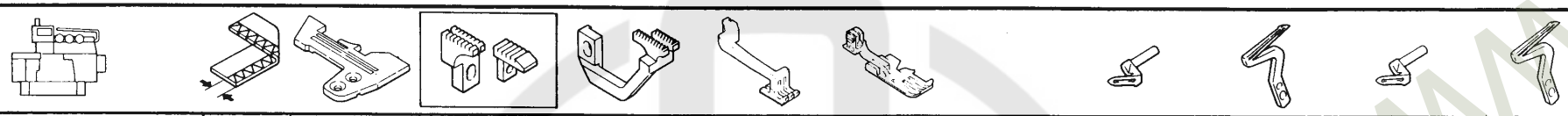

| ミシンケイシキ ショウ | ゲージ NG | ゲージ SW | ハリイタ | シュオクリバ (クミ) | サドウオクリバ | ウワオクリバ | オサエ | オサエツメ | ウワ ルーパー | シタ ルーパー | ウワルーパー FOR 512 | シタルーパー ONLY |
|---|---|---|---|---|---|---|---|---|---|---|---|---|
| MACHINE TYPE SPEC. | GAUGE NG | GAUGE SW | NEEDLE PLATE | MAIN FEED DOG COMP. | DIFF. FEED DOG | TOP FEED DOG | PRESSER BODY | FOOT FINGER | UPPER LOOPER | LOWER LOOPER | UPPER LOOPER | LOWER LOOPER |
| ETS52-142FB2/S1(S2) | 2 | 3 | 210804 | 210574-BF | 212572-BF | 212677-10F | 212673A30 | ------ | 211719 | 212215 | 211844 | 212215 |
| /514-463-W/KL100 | 2 | 4 | 210805 | " | " | " | " A40 | ------ | " #38 | " | " #42 | " |
| /512-463-W/KL100 | 2 | 5 | 210806 | " | " | " | " A50 | ------ | " | " | " | " |
| ETS52-243FD2 | 2 | 3 | 210804 | 210574-BF | 212572-BF | 212677-10F | 212673A30 | ------ | 211719 | 212215 | 211844 | 212215 |
| /514-463-W/KL100 | 2 | 4 | 210805 | " | " | " | " A40 | ------ | " #38 | " | " #42 | " |
| /512-463-W/KL100 | 2 | 5 | 210806 | " | " | " | " A50 | ------ | " | " | " | " |
| ETS52-245FD2 | 2 | 3 | 210804 | 210574-BF | 212572-BF | 212677-10F | 212673A30 | ------ | 210365 | 212644 | 211507 | 212644 |
| /514-363-W/KL100 | 2 | 4 | 210805 | " | " | " | " A40 | ------ | " #24 | " | " #36 | " |
| /512-363-W/KL100 | 2 | 5 | 210806 | " | " | " | " A50 | ------ | " | " | " | " |

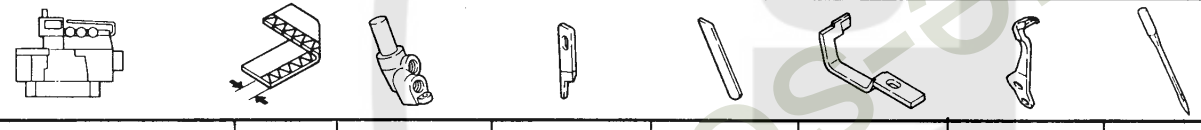

| ミシンケイシキ ショウ | ゲージ NG | ゲージ SW | ハリトメ | ウワメス | シタメス | ハリウケ (マエ) | ハリウケ (ウシロ) | ハリ |
|---|---|---|---|---|---|---|---|---|
| MACHINE TYPE SPEC. | GAUGE NG | GAUGE SW | NEEDLE HOLDER | UPPER KNIFE | LOWER KNIFE | NEEDLE (FRONT) | GUARD (REAR) | NEEDLE |
| ETS52-142FB2/S1(S2) | 2 | 3 | 211360 | 201121A | 202295 | 212781 | 210724 | DCX27 |
| /514-463-W/KL100 | 2 | 4 | " | " | " | " | " | #11 |
| /512-463-W/KL100 | 2 | 5 | " | " | " | " | " | |
| ETS52-243FD2 | 2 | 3 | 211360 | 201121A | 202295 | 212781 | 210724 | DCX27 |
| /514-463-W/KL100 | 2 | 4 | " | " | " | " | " | #11 |
| /512-463-W/KL100 | 2 | 5 | " | " | " | " | " | |
| ETS52-245FD2 | 2 | 3 | 211360 | 201121A | 202295 | 212781 | 210724 | DCX27 |
| /514-363-W/KL100 | 2 | 4 | " | " | " | " | " | #11 |
| /512-363-W/KL100 | 2 | 5 | " | " | " | " | " | |



www.collectsewing.co.uk

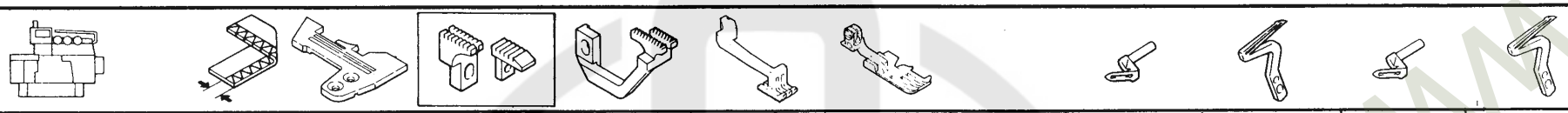

| ミシンケイシキ ショウ | ゲージ NG | ゲージ SW | ハリイタ | シュオクリハ (クミ) | サトウオクリハ | ウワオクリハ | オサエ | オサエツメ | ウワルーパー | シタルーパー | ウワルーパー FOR 512 | シタルーパー ONLY |
|---|---|---|---|---|---|---|---|---|---|---|---|---|
| MACHINE TYPE SPEC. | GAUGE NG | GAUGE SW | NEEDLE PLATE | MAIN FEED DOG COMP. | DIFF. FEED DOG | TOP FEED DOG | PRESSER BODY | FOOT FINGER | UPPER LOOPER | LOWER LOOPER | UPPER LOOPER | LOWER LOOCER |
| ETS52-253FB2/S1(S2) | 2 | 3 | 212730-30 | 213567-16F | 213550-13F | 212677A10F | 212673B30 | ------ | 211720 | 212215A | 211844 | 212215 |
| /514-493-W/KL100 | 2 | 4 | " -40 | " | " | " | " B40 | ------ | " #40 | " | " #42 | " |
| /512-493-W/KL100 | 2 | 5 | " -50 | " | " | " | " B50 | ------ | " | " | " | " |
| /2ノミKL100ツキ | 2.5 | 2.5 | 212731-25 | " | " | " | 212778B25 | ------ | " | " | " | " |
| | 2.5 | 3.5 | " -35 | " | " | " | " B35 | ------ | " | " | " | " |
| | 2.5 | 4.5 | " -45 | " | " | " | " B45 | ------ | " | " | " | " |
| | 3 | 4 | 212774-40 | " | " | " | 212778B45 | ------ | " | " | " | " |
| | 3 | 5 | " -50 | " | " | " | " | ------ | " | " | " | " |
| ETS52-253FB2K/S1(S2) | 2 | 3 | 212730-30 | 213567-16F | 213550-13F | 212677A10F | 212673B30 | ------ | 211720 | 212215A | 211844 | 212215 |
| /514-493-W/KL100 | 2 | 4 | " -40 | " | " | " | " B40 | ------ | " #40 | " | " #42 | " |
| /512-493-W/KL100 | 2 | 5 | " -50 | " | " | " | " B50 | ------ | " | " | " | " |
| /2ノミKL100ツキ | 2.5 | 2.5 | 212731-25 | " | " | " | 212778B25 | ------ | " | " | " | " |
| | 2.5 | 3.5 | " -35 | " | " | " | " B35 | ------ | " | " | " | " |
| | 2.5 | 4.5 | " -45 | " | " | " | " B45 | ------ | " | " | " | " |
| | 3 | 4 | 212774-40 | " | " | " | 212778B45 | ------ | " | " | " | " |
| | 3 | 5 | " -50 | " | " | " | " | ------ | " | " | " | " |

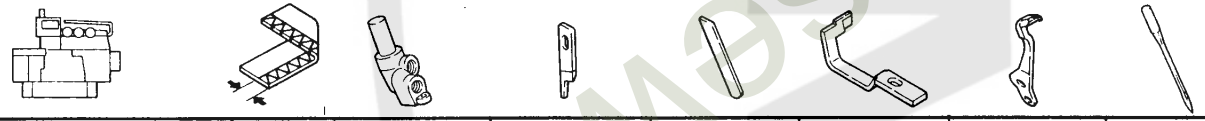

| ミシンケイシキ ショウ | ゲージ NG | ゲージ SW | ハリトメ | ウワメス | シタメス | ハリウケ (マエ) | ハリウケ (ウシロ) | ハリ |
|---|---|---|---|---|---|---|---|---|
| MACHINE TYPE SPEC. | GAUGE NG | GAUGE SW | NEEDLE HOLDER | UPPER KNIFE | LOWER KNIFE | NEEDLE (FRONT) | GUARD (REAR) | NEEDLE |
| ETS52-253FB2/S1(S2) | 2 | 3 | 211360 | 201121A | 202295 | 212781 | 210724 | DCX27 |
| /514-493-W/KL100 | 2 | 4 | " | " | " | " | " | #11 |
| /512-493-W/KL100 | 2 | 5 | " | " | " | " | " | |
| /2ノミKL100ツキ | 2.5 | 2.5 | 211361 | " | " | " | " | |
| | 2.5 | 3.5 | " | " | " | " | " | |
| | 2.5 | 4.5 | " | " | " | " | " | |
| | 3 | 4 | 211362 | " | " | " | " | |
| | 3 | 5 | " | " | " | " | " | |
| ETS52-253FB2K/S1(S2) | 2 | 3 | 211360 | 211771 | 202295 | 212781 | 210724 | DCX27 |
| /514-493-W/KL100 | 2 | 4 | " | " | " | " | " | #11 |
| /512-493-W/KL100 | 2 | 5 | " | " | " | " | " | |
| /2ノミKL100ツキ | 2.5 | 2.5 | 211361 | " | " | " | " | |
| | 2.5 | 3.5 | " | " | " | " | " | |
| | 2.5 | 4.5 | " | " | " | " | " | |
| | 3 | 4 | 211362 | " | " | " | " | |
| | 3 | 5 | " | " | " | " | " | |



www.coverlock-sewing.co.uk

# ETS52 ゲージパーツ表 (5)

# ETS52 GAUGE PARTS LIST (5)

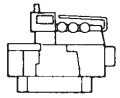
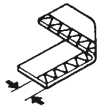
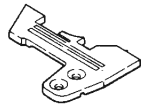
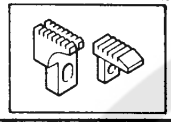
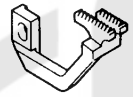
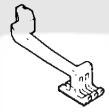
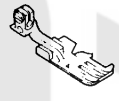

| ミシンケイシキ<br>シヨウ | ゲージ<br>NG | <br>SW | ハリイタ | シユオクリバ<br>(クミ) | サトウオクリバ | ウワオクリバ | オサエ | オサエツメ | ウワ<br>ルーパー | シタ<br>ルーパー | ウワルーパー<br>FOR 512 | シタルーパー<br>ONLY |
|---|---|---|---|---|---|---|---|---|---|---|---|---|
| MACHINE TYPE<br>SPEC. | GAUGE<br>NG | <br>SW | NEEDLE<br>PLATE | MAIN FEED<br>DOG COMP. | DIFF.<br>FEED DOG | TOP<br>FEED DOG | PRESSER<br>BODY | FOOT<br>FINGER | UPPER<br>LOOPER | LOWER<br>LOOPER | UPPER<br>LOOPER | LOWER<br>LOOCER |
| ETS52-350FC2/P1(P2)<br>/504-453-W | | 5 | 210801 | 212759-16F | 212740-13F | 212677-10F | 212736-50 | ------ | 211719<br>#38 | 212215 | ------ | ------ |
| ETS52-351FC2/P1(P2)<br>/514-453-W<br>/512-453-W | 2 | 4 | 210809 | 212759-16F | 212740-13F | 212677-10F | 212738-40 | ------ | 211719<br>#38 | 212215 | 211844<br>#42 | 212215 |
| ETS52-352FC2/P1(P2)<br>/514-353-W<br>/512-353-W | 2 | 4 | 210809 | 212759-16F | 212740-13F | 212677-10F | 212738-40 | ------ | 210365<br>#24 | 212644 | 211507<br>#36 | 212644 |

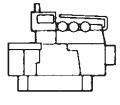
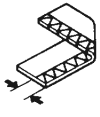

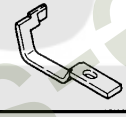

| ミシンケイシキ<br>シヨウ | ゲージ<br>NG | <br>SW | ハリトメ | ウワメス | シタメス | ハリウケ<br>(マエ) | ハリウケ<br>(ウシロ) | ハリ |
|---|---|---|---|---|---|---|---|---|
| MACHINE TYPE<br>SPEC. | GAUGE<br>NG | <br>SW | NEEDLE<br>HOLDER | UPPER<br>KNIFE | LOWER<br>KNIFE | NEEDLE<br>(FRONT) | GUARD<br>(REAR) | NEEDLE |
| ETS52-350FC2/P1(P2)<br>/504-453-W | | 5 | 211358 | 201121A | 202295 | 212781 | 210724 | DCX27<br>#9 |
| ETS52-351FC2/P1(P2)<br>/514-453-W<br>/512-453-W | 2 | 4 | 211360 | 201121A | 202295 | 212781 | 210724 | DCX27<br>#9 |
| ETS52-352FC2/P1(P2)<br>/514-353-W<br>/512-353-W | 2 | 4 | 211360 | 201121A | 202295 | 212781 | 210724 | DCX27<br>#9 |



www.collegesewing.co.uk

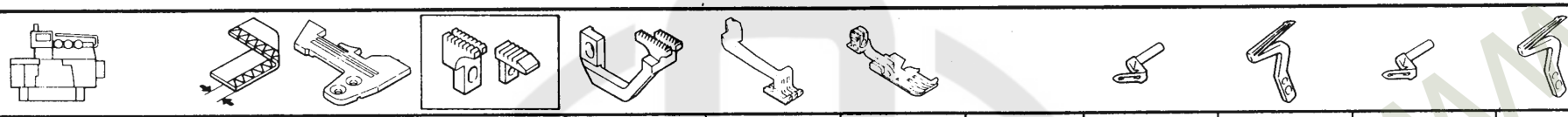

| ミシンケイシキ ショウ | ゲージ NG | ゲージ SW | ハリイタ | シユオクリハ゛ (クミ) | サト゛ウオクリハ゛ | ウワオクリハ゛ | オサエ | オサエツメ | ウワ ルーハ゜ー | シタ ルーハ゜ー | ウワルーハ゜ー FOR 512 | シタルーハ゜ー ONLY |
|---|---|---|---|---|---|---|---|---|---|---|---|---|
| MACHINE TYPE SPEC. | GAUGE NG | GAUGE SW | NEEDLE PLATE | MAIN FEED DOG COMP. | DIFF. FEED DOG | TOP FEED DOG | PRESSER BODY | FOOT FINGER | UPPER LOOPER | LOWER LOOPER | UPPER LOOPER | LOWER LOOOER |
| ETS52-130FA3 | | 3 | 210795 | 210574-3F | 212572-BF | 212768-10F | 212764-30 | ------ | 210366 | 212644 | ------ | ------ |
| /504-363-N | | 4 | 210796 | " | " | " | " -40 | ------ | " #26 | " | ------ | ------ |
| | | 5 | 210797 | " | " | " | " -50 | ------ | " | " | ------ | ------ |
| ETS52-133FA3 | 2 | 3 | 210804 | 210574-BF | 212572-BF | 212768-10F | 212766-30 | ------ | 210365 | 212644 | 211507 | 212644 |
| /514-363-N | 2 | 4 | 210805 | " | " | " | " -40 | ------ | " #24 | " | " #36 | " |
| /512-363-N | 2 | 5 | 210806 | " | " | " | " -50 | ------ | " | " | " | " |
| ETS52-141FA3 | | 3 | 210795 | 210574-BF | 212572-BF | 212768-10F | 212764-30 | ------ | 211719 | 212215 | ------ | ------ |
| /504-463-W | | 4 | 210796 | " | " | " | " -40 | ------ | #38 | " | ------ | ------ |
| | | 5 | 210797 | " | " | " | " -50 | ------ | " | " | ------ | ------ |
| ETS52-142FA3 | 2 | 3 | 210804 | 210574-3F | 212572-BF | 212768-10F | 212766-30 | ------ | 211719 | 212215 | 211844 | 212215 |
| /514-463-W | 2 | 4 | 210805 | " | " | " | " -40 | ------ | " #38 | " | " #42 | " |
| /512-463-W | 2 | 5 | 210806 | " | " | " | " -50 | ------ | " | " | " | " |

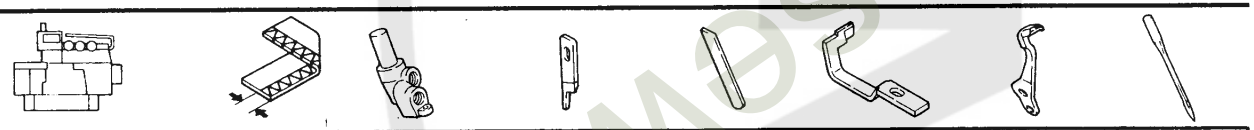

| ミシンケイシキ ショウ | ゲージ NG | ゲージ SW | ハリト゛メ | ウワメス | シタメス | ハリウケ (マエ) | ハリウケ (ウシロ) | ハリ |
|---|---|---|---|---|---|---|---|---|
| MACHINE TYPE SPEC. | GAUGE NG | GAUGE SW | NEEDLE HOLDER | UPPER KNIFE | LOWER KNIFE | NEEDLE (FRONT) | GUARD (REAR) | NEEDLE |
| ETS52-130FA3 | | 3 | 211358 | 201121A | 201127 | 212781 | 210724 | DCX27 |
| /504-363-N | | 4 | " | " | 202295 | " | " | #9 |
| | | 5 | " | " | " | " | " | |
| ETS52-133FA3 | 2 | 3 | 211360 | 201121A | 202295 | 212781 | 210724 | DCX27 |
| /514-363-N | 2 | 4 | " | " | " | " | " | #9 |
| /512-363-N | 2 | 5 | " | " | " | " | " | |
| ETS52-141FA3 | | 3 | 211358 | 201121A | 201127 | 212781 | 210724 | DCX27 |
| /504-463-W | | 4 | " | " | 202295 | " | " | #11 |
| | | 5 | " | " | " | " | " | |
| ETS52-142FA3 | 2 | 3 | 211360 | 201121A | 202295 | 212781 | 210724 | DCX27 |
| /514-463-W | 2 | 4 | " | " | " | " | " | #11 |
| /512-463-W | 2 | 5 | " | " | " | " | " | |

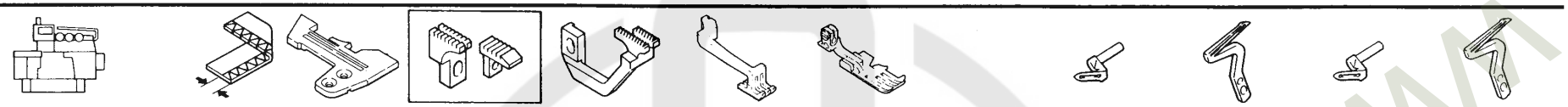

| ミシンケイシキ ショウ | ゲージ NG | ゲージ SW | ハリイタ | シュオクリバ (クミ) | サトウオクリバ | ウワオクリバ | オサエ | オサエツメ | ウワルーパー | シタルーパー | ウワルーパー FOR 512 | シタルーパー ONLY |
|---|---|---|---|---|---|---|---|---|---|---|---|---|
| MACHINE TYPE SPEC. | GAUGE NG | GAUGE SW | NEEDLE PLATE | MAIN FEED DOG COMP. | DIFF. FEED DOG | TOP FEED DOG | PRESSER BODY | FOOT FINGER | UPPER LOOPER | LOWER LOOPER | UPPER LOOPER | LOWER LOOPER |
| ETS52-210FE3 /505-323-N | | 4 | 210784 | 210569-BF | 212704-13F | 212763-10F | 212761-40 | ------ | 210366 #26 | 212644 | ------ | ------ |
| ETS52-243FD3 /514-463-W/KL100 /512-463-W/KL100 | 2 2 2 | 3 4 5 | 210804 210805 210806 | 210574-BF " " | 212572-BF " " | 212768-10F " " | 212766A30 " A40 " A50 | ------ ------ ------ | 211719 " #38 " | 212215 " " | 211844 " #42 " | 212215 " " |
| ETS52-243FD4/P1(P2) /514-463-W/KL100 /512-463-W/KL100 | 2 2 2 | 3 4 5 | 210804 210805 210806 | 210574-BF " " | 212572-BF " " | 212768-10F " " | 212766-30 " -40 " -50 | ------ ------ ------ | 211719 " #38 " | 212215 " " | 211844 " #42 " | 212215 " " |
| ETS52-245FD3 /514-363-W/KL100 /512-363-W/KL100 | 2 2 2 | 3 4 5 | 210804 210805 210806 | 210574-BF " " | 212572-BF " " | 212768-10F " " | 212766A30 " A40 " A50 | ------ ------ ------ | 210365 " #24 " | 212644 " " | 211507 " #36 " | 212644 " " |

| ミシンケイシキ ショウ | ゲージ NG | ゲージ SW | ハリトメ | ウワメス | シタメス | ハリウケ (マエ) | ハリウケ (ウシロ) | ハリ |
|---|---|---|---|---|---|---|---|---|
| MACHINE TYPE SPEC. | GAUGE NG | GAUGE SW | NEEDLE HOLDER | UPPER KNIFE | LOWER KNIFE | NEEDLE GUARD (FRONT) | NEEDLE GUARD (REAR) | NEEDLE |
| ETS52-210FE3 /505-323-N | | 4 | 211358 | 201121A | 202295 | 212781 | 210724 | DCX27 #9 |
| ETS52-243FD3 /514-463-W/KL100 /512-463-W/KL100 | 2 2 2 | 3 4 5 | 211360 " " | 201121A " " | 202295 " " | 212781 " " | 210724 " " | DCX27 #11 |
| ETS52-243FD4/P1(P2) /514-463-W/KL100 /512-463-W/KL100 | 2 2 2 | 3 4 5 | 211360 " " | 201121A " " | 202295 " " | 212781 " " | 210724 " " | DCX27 #11 |
| ETS52-245FD3 /514-363-W/KL100 /512-363-W/KL100 | 2 2 2 | 3 4 5 | 211360 " " | 201121A " " | 202295 " " | 212781 " " | 210724 " " | DCX27 #11 |

# ETS52 ゲージパーツ表 (8)

# ETS52 GAUGE PARTS LIST (8)

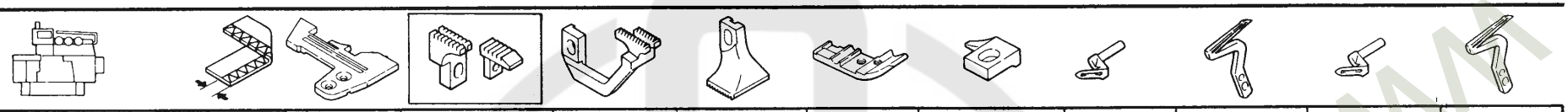

| ミシンケイシキ ショウ | ゲージ NG | ゲージ SW | ハリイタ | シュオクリハ゛ (クミ) | サト゛ウオクリハ゛ | ウワオクリハ゛ | オサエ | オサエヅメ | ウワ ルーハ゜ー | シタ ルーハ゜ー | ウワルーハ゜ー FOR 512 | シタルーハ゜ー ONLY |
|---|---|---|---|---|---|---|---|---|---|---|---|---|
| MACHINE TYPE SPEC. | GAUGE NG | GAUGE SW | NEEDLE PLATE | MAIN FEED DOG COMP. | DIFF. FEED DOG | TOP FEED DOG | PRESSER BODY | FOOT FINGER | UPPER LOOPER | LOWER LOOPER | UPPER LOOPER | LOWER LOOOER |
| ETS52-141BA2<br>/504-463-W | | 4<br>5 | 210796<br>210797 | 210574-BF<br>" | 210445-BF<br>" | 212181-BF<br>" | 212133<br>" | 210371<br>" | 211719<br>" #38 | 212215<br>" | ------<br>------ | ------<br>------ |
| ETS52-142BA2<br>/514-463-W<br>/512-463-W | 2<br>2<br>2 | 3<br>4<br>5 | 210804<br>210805<br>210806 | 210574-BF<br>"<br>" | 210445-BF<br>"<br>" | 212181-BF<br>"<br>" | 212133<br>"<br>" | 210503<br>210374<br>" | 211719<br>" #38<br>" | 212215<br>"<br>" | 211844<br>" #42<br>" | 212215<br>"<br>" |
| ETS52-350BC2/P1(P2)<br>/504-453-W | | 5 | 210801 | 212759-16F | 211929-BF | 212070-BF | 212068 | 211874-TA | 211719<br>#38 | 212215 | ------ | ------ |
| ETS52-351BC2/P1(P2)<br>/514-453-W<br>/512-453-W | 2 | 4 | 210809 | 212759-16F | 211929-BF | 212070-BF | 212068 | 211875-TA | 211719<br>#38 | 212215 | 211844<br>#42 | 212215 |

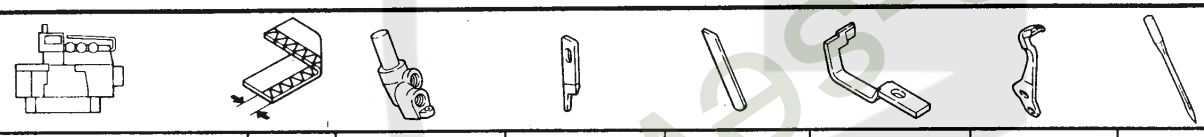

| ミシンケイシキ ショウ | ゲージ NG | ゲージ SW | ハリト゛メ | ウワメス | シタメス | ハリウケ (マエ) | ハリウケ (ウシロ) | ハリ |
|---|---|---|---|---|---|---|---|---|
| MACHINE TYPE SPEC. | GAUGE NG | GAUGE SW | NEEDLE HOLDER | UPPER KNIFE | LOWER KNIFE | NEEDLE (FRONT) | GUARD (REAR) | NEEDLE |
| ETS52-141BA2<br>/504-463-W | | 4<br>5 | 211358<br>" | 201121A<br>" | 202295<br>" | 212781<br>" | 210724<br>" | DCX27<br>#11 |
| ETS52-142BA2<br>/514-463-W<br>/512-463-W | 2<br>2<br>2 | 3<br>4<br>5 | 211360<br>"<br>" | 201121A<br>"<br>" | 202295<br>"<br>" | 212781<br>"<br>" | 210724<br>"<br>" | DCX27<br>#11 |
| ETS52-350BC2/P1(P2)<br>/504-453-W | | 5 | 211358 | 201121A | 202295 | 212781 | 210724 | DCX27<br>#9 |
| ETS52-351BC2/P1(P2)<br>/514-453-W<br>/512-453-W | 2 | 4 | 211360 | 201121A | 202295 | 212781 | 210724 | DCX27<br>#9 |



www.college-sewing.co.uk

# INDEX


| PART NO. | PAGE | NO. REF. |
|---|---|---|
| DCX27 | 68 | |
| DCX27 | 69 | |
| DCX27 | 70 | |
| DCX27 | 71 | |
| DCX27 | 72 | |
| DCX27 | 73 | |
| DCX27 | 74 | |
| DCX27 | 75 | |
| 127 | 51 | 11 |
| 128 | 51 | 12 |
| 131 | 51 | 16 |
| 153 | 51 | 15 |
| 178 | 51 | 5 |
| 179 | 51 | 14 |
| 200 | 51 | 10 |
| 233-CA | 53 | 23 |
| 233-CA | 53 | 23 |
| 272 | 49 | 31 |
| 282 | 51 | 6 |
| 284 | 51 | 7 |
| 285 | 51 | 8 |
| 293B | 53 | 27 |
| 293B | 53 | 27 |
| 293C | 53 | 26 |
| 293C | 53 | 26 |
| 322 | 51 | 9 |
| 380A | 53 | 6 |
| 380A | 53 | 6 |
| 381-CA | 53 | 9 |
| 381-CA | 53 | 9 |
| 382-CA | 53 | 11 |
| 382-CA | 53 | 11 |
| 383-CA | 53 | 19 |
| 383-CA | 53 | 19 |
| 384 | 53 | 20 |
| 384 | 53 | 20 |
| 386 | 53 | 36 |
| 386 | 53 | 36 |
| 403 | 47 | 30 |
| 404 | 47 | 32 |
| 405 | 47 | 36 |
| 406 | 47 | 31 |
| 407 | 47 | 34 |
| 408 | 47 | 35 |
| 409 | 47 | 37 |
| 410 | 47 | 39 |
| 413 | 47 | 29 |
| 414 | 51 | 13 |
| 453 | 51 | 2 |
| 470 | 49 | 28 |
| 471 | 49 | 29 |
| 478 | 51 | 17 |
| 482 | 51 | 21 |
| 484 | 51 | 4 |
| 485 | 51 | 3 |
| 486B9C | 53 | |
| 486B9C | 53 | |
| 486C9C | 53 | |
| 486C9C | 53 | |
| 502-CA | 53 | 15 |
| 502-CA | 53 | 15 |
| 503-CA | 53 | 1 |
| 503-CA | 53 | 1 |
| 504-CA | 53 | 16 |
| 504-CA | 53 | 16 |
| 505-CA | 53 | 4 |
| 505-CA | 53 | 4 |
| 505ACA | 53 | 5 |
| 505ACA | 53 | 5 |
| 506 | 53 | 32 |
| 506 | 53 | 32 |
| 507 | 53 | 10 |
| 507 | 53 | 10 |
| 509 | 53 | 2 |
| 509 | 53 | 2 |
| 512 | 53 | 13 |
| 512 | 53 | 13 |
| 527-CA | 53 | 30 |
| 527-CA | 53 | 30 |
| 527ACA | 53 | 31 |
| 527ACA | 53 | 31 |
| 908 | 51 | 1 |
| 1174 | 7 | 19 |
| 1174 | 15 | 36 |
| 1174 | 47 | 44 |
| 1175-2 | 23 | 32 |
| 1175-2 | 27 | 25 |
| 1175-2 | 27 | 30 |
| 1175-2 | 27 | 37 |
| 1175-2 | 29 | 18 |
| 1175-2 | 37 | 13 |
| 1175-2 | 43 | 26 |
| 1175-3 | 9 | 30 |
| 1196 | 43 | 36 |
| 1202 | 9 | 40 |
| 1202 | 41 | 5 |
| 1202 | 41 | 11 |
| 1202 | 47 | 19 |
| 1202 | 47 | 26 |
| 1216 | 9 | 25 |
| 1216 | 9 | 45 |
| 1227 | 33 | 33 |
| 1231 | 19 | 28 |
| 1231 | 23 | 26 |
| 1234 | 43 | 32 |
| 1333 | 35 | 57 |
| 1435 | 7 | 25 |
| 1448 | 13 | 9 |
| 1457 | 15 | 7 |
| 1458 | 39 | 8 |
| 1458 | 39 | 25 |
| 1459 | 7 | 26 |
| 1459 | 11 | 3 |
| 1459 | 11 | 18 |
| 1459 | 35 | 33 |
| 1459 | 43 | 12 |
| 1732 | 25 | 44 |
| 1998-2 | 21 | 6 |
| 1998-2 | 21 | 17 |
| 1998-2 | 31 | 25 |
| 2133-1 | 3 | 6 |
| 2133-1 | 3 | 8 |
| 2133-1 | 27 | 13 |
| 2133-1 | 29 | 20 |
| 2193 | 19 | 19 |
| 2193 | 23 | 19 |
| 2193 | 25 | 5 |
| 2193 | 33 | 27 |
| 2285B | 35 | 2 |
| 2902 | 19 | 31 |
| 2902 | 23 | 34 |
| 2902 | 27 | 44 |
| 2902 | 33 | 4 |
| 2905 | 7 | 30 |
| 2905 | 9 | 16 |
| 2905 | 9 | 18 |
| 2905 | 9 | 47 |
| 2905 | 19 | 13 |
| 2905 | 25 | 46 |
| 2905 | 29 | 37 |
| 2905 | 31 | 4 |
| 2905 | 37 | 40 |
| 2905 | 39 | 53 |
| 2905 | 43 | 4 |
| 2906 | 47 | 11 |
| 2913-1 | 5 | 28 |
| 2921 | 35 | 25 |
| 2921 | 35 | 51 |
| 2921 | 43 | 44 |
| 2921 | 43 | 48 |
| 3044 | 7 | 16 |
| 3044 | 31 | 9 |
| 3044 | 35 | 9 |
| 3044 | 45 | 8 |
| 3044 | 47 | 6 |
| 3091 | 7 | 20 |
| 3091 | 43 | 20 |
| 4009-1 | 5 | 18 |
| 4009-1 | 7 | 10 |
| 4009-1 | 7 | 34 |
| 4009-1 | 9 | 8 |
| 4009-1 | 9 | 43 |
| 4009-1 | 19 | 50 |
| 4009-1 | 27 | 11 |
| 4009-1 | 33 | 22 |
| 4009-1 | 45 | 6 |
| 4012 | 47 | 33 |
| 4012 | 53 | 24 |
| 4012 | 53 | 28 |
| 4012 | 53 | 24 |
| 4012 | 53 | 28 |
| 4014 | 53 | 21 |
| 4014 | 53 | 21 |
| 4021 | 53 | 17 |
| 4021 | 53 | 17 |
| 4022 | 53 | 14 |
| 4022 | 53 | 14 |
| 4117 | 53 | 33 |
| 4117 | 53 | 33 |
| 4512 | 49 | 5 |
| 4803 | 53 | 8 |
| 4803 | 53 | 22 |
| 4803 | 53 | 25 |
| 4803 | 53 | 29 |
| 4803 | 53 | 8 |
| 4803 | 53 | 22 |
| 4803 | 53 | 25 |
| 4803 | 53 | 29 |
| 4805 | 45 | 24 |
| 4805 | 53 | 18 |
| 4805 | 53 | 34 |
| 4805 | 53 | 18 |
| 4805 | 53 | 34 |
| 4806 | 43 | 9 |
| 4818 | 47 | 38 |
| 4904 | 49 | 12 |
| 4906 | 45 | 12 |
| 4906 | 45 | 15 |
| 4906 | 49 | 16 |
| 4908 | 47 | 40 |
| 5012 | 7 | 6 |
| 5012 | 19 | 45 |
| 5012 | 41 | 22 |
| 5022 | 15 | 12 |
| 5022 | 17 | 29 |
| 5029 | 13 | 8 |
| 5029 | 35 | 44 |
| 5030 | 35 | 29 |
| 5030 | 35 | 59 |
| 5050 | 13 | 24 |
| 5053 | 5 | 12 |
| 5053 | 31 | 12 |
| 5053 | 47 | 8 |
| 5059 | 15 | 26 |
| 5060 | 9 | 6 |
| 5060 | 9 | 23 |
| 5060 | 15 | 33 |
| 5060 | 37 | 4 |
| 5060 | 39 | 4 |
| 5077 | 43 | 39 |
| 5077 | 43 | 41 |
| 5078 | 5 | 3 |
| 5082A | 17 | 8 |
| 5082A | 19 | 8 |
| 5082A | 23 | 8 |
| 5084 | 25 | 32 |
| 5084 | 27 | 15 |
| 5084 | 33 | 18 |
| 5088 | 33 | 6 |
| 5088 | 47 | 16 |
| 5089 | 29 | 32 |
| 5089 | 35 | 23 |
| 5089 | 35 | 55 |
| 5091 | 25 | 53 |
| 5091 | 41 | 18 |
| 5094 | 33 | 24 |
| 5095 | 9 | 3 |
| 5095 | 37 | 14 |
| 5095 | 39 | 11 |
| 5095 | 39 | 23 |
| 5102 | 9 | 49 |
| 5104 | 43 | 24 |
| 5104 | 49 | 21 |
| 5111 | 43 | 6 |
| 5113 | 37 | 48 |
| 5113 | 39 | 62 |
| 5117 | 5 | 25 |
| 5117 | 9 | 10 |
| 5117 | 13 | 19 |
| 5117 | 17 | 13 |
| 5117 | 25 | 36 |
| 5117 | 25 | 42 |
| 5117 | 29 | 4 |
| 5117 | 31 | 2 |
| 5117 | 33 | 30 |
| 5117 | 35 | 37 |
| 5117 | 37 | 46 |
| 5117 | 39 | 10 |
| 5117 | 39 | 60 |
| 5117 | 41 | 12 |
| 5118 | 25 | 49 |
| 5118 | 37 | 21 |
| 5118 | 39 | 17 |
| 5118 | 43 | 15 |
| 5118 | 47 | 12 |
| 5138B | 37 | 43 |
| 5138B | 39 | 56 |
| 5142 | 5 | 23 |
| 5142 | 9 | 12 |
| 5145 | 37 | 15 |
| 5152 | 47 | 22 |
| 5163 | 5 | 13 |
| 5163 | 9 | 14 |
| 5184 | 47 | 4 |
| 5198 | 9 | 2 |
| 5205 | 27 | 42 |
| 5231 | 27 | 35 |
| 5238 | 29 | 22 |
| 5276 | 49 | 23 |
| 5282 | 19 | 34 |
| 5284 | 21 | 3 |
| 5284 | 21 | 14 |
| 5292 | 9 | 37 |
| 5292 | 15 | 16 |
| 5292 | 15 | 22 |
| 5292 | 17 | 22 |
| 5292 | 17 | 24 |
| 5292 | 19 | 38 |
| 5292 | 21 | 10 |
| 5292 | 21 | 21 |
| 5292 | 25 | 19 |
| 5292 | 25 | 56 |
| 5292 | 31 | 30 |
| 5292 | 35 | 12 |
| 5292 | 35 | 21 |
| 5299 | 35 | 27 |
| 5316 | 25 | 26 |
| 5316 | 31 | 19 |
| 5317 | 27 | 18 |
| 5328 | 5 | 10 |
| 5328 | 13 | 2 |
| 5328 | 17 | 35 |
| 5328 | 35 | 31 |
| 5328 | 35 | 49 |
| 5328 | 43 | 16 |
| 5332A | 5 | 29 |
| 5345 | 41 | 27 |
| 5346 | 27 | 9 |
| 5346 | 27 | 47 |
| 5357 | 3 | 11 |
| 5357 | 17 | 33 |
| 5376 | 11 | 5 |
| 5376 | 11 | 7 |
| 5376 | 11 | 9 |
| 5376 | 11 | 13 |
| 5376 | 11 | 20 |
| 5376 | 11 | 22 |
| 5376 | 11 | 24 |
| 5376 | 11 | 28 |
| 5380 | 43 | 22 |
| 5380 | 49 | 20 |
| 5408 | 19 | 36 |
| 5426 | 49 | 25 |
| 5427 | 25 | 18 |
| 5434A | 5 | 30 |
| 5437 | 25 | 12 |
| 5441 | 23 | 16 |
| 5446 | 17 | 17 |
| 5453 | 47 | 42 |
| 5455 | 27 | 6 |
| 5457 | 11 | 11 |
| 5457 | 11 | 15 |
| 5457 | 11 | 26 |
| 5457 | 11 | 30 |
| 5457 | 15 | 28 |
| 5457 | 25 | 23 |
| 5457 | 25 | 28 |
| 5457 | 27 | 3 |
| 5457 | 27 | 8 |
| 5457 | 33 | 10 |
| 5457 | 35 | 6 |
| 5461 | 13 | 13 |
| 5461 | 15 | 31 |
| 5461 | 25 | 7 |
| 5461 | 25 | 21 |
| 5461 | 33 | 12 |
| 5476 | 53 | 3 |
| 5476 | 53 | 3 |
| 5480 | 7 | 32 |
| 5481 | 35 | 3 |
| 5482 | 5 | 19 |
| 5483 | 7 | 15 |
| 5484-HC | 17 | 31 |
| 5485 | 15 | 3 |
| 5486 | 25 | 38 |
| 5486 | 31 | 7 |
| 5487 | 23 | 30 |
| 5488 | 7 | 22 |
| 5489 | 27 | 23 |
| 5489 | 29 | 12 |
| 5489 | 31 | 33 |
| 5492 | 27 | 29 |
| 5492 | 29 | 16 |
| 5497 | 13 | 4 |
| 5501 | 17 | 37 |
| 5501 | 17 | 40 |
| 5503 | 35 | 8 |
| 5504 | 33 | 36 |
| 5515 | 43 | 19 |
| 5519 | 19 | 15 |
| 5519 | 23 | 13 |
| 5522 | 13 | 25 |
| 5523 | 13 | 23 |
| 5534 | 49 | 27 |
| 5535 | 17 | 15 |
| 5535 | 17 | 19 |
| 5543 | 45 | 18 |
| 5543 | 45 | 21 |
| 5543 | 45 | 23 |
| 5543 | 45 | 27 |
| 5543 | 45 | 31 |
| 5546 | 19 | 24 |
| 5546 | 23 | 23 |
| 5568 | 29 | 28 |
| 5589 | 9 | 21 |
| 5594 | 31 | 16 |
| 5594 | 31 | 22 |
| 5594 | 31 | 27 |
| 5594 | 33 | 14 |
| 5594 | 35 | 14 |
| 5595 | 5 | 14 |
| 5596 | 35 | 16 |
| 5597 | 29 | 25 |
| 5597 | 33 | 20 |
| 7102 | 53 | 12 |
| 7102 | 53 | 12 |
| 9029 | 49 | 2 |
| 9030 | 49 | 30 |
| 9050 | 49 | 13 |
| 137906 | 7 | 3 |
| 137906 | 9 | 41 |
| 167066 | 47 | 17 |
| 167066 | 47 | 20 |
| 167066 | 47 | 27 |
| 167066 | 47 | 45 |
| 192130 | 7 | 14 |
| 198192 | 9 | 19 |
| 200136 | 37 | 22 |
| 200136 | 39 | 18 |
| 200136 | 39 | 26 |
| 200136 | 39 | 30 |
| 200144 | 39 | 33 |
| 200149 | 5 | 15 |
| 200152 | 37 | 24 |
| 200152 | 39 | 19 |
| 200152 | 39 | 27 |
| 200152 | 39 | 31 |
| 200152 | 39 | 34 |
| 200155 | 41 | 24 |
| 200555 | 9 | 36 |
| 200555 | 43 | 30 |
| 201002 | 3 | 9 |
| 201022 | 31 | 14 |
| 201037 | 17 | 4 |
| 201056 | 15 | 6 |
| 201068 | 19 | 4 |
| 201086 | 23 | 4 |
| 201089 | 23 | 12 |
| 201121A | 33 | 5 |
| 201121A | 68 | |
| 201121A | 69 | |
| 201121A | 70 | |
| 201121A | 71 | |
| 201121A | 72 | |
| 201121A | 73 | |
| 201121A | 74 | |
| 201121A | 75 | |
| 201127 | 73 | |
| 201127A | 33 | 31 |
| 201156 | 35 | 54 |
| 201185 | 7 | 11 |
| 201185 | 25 | 47 |
| 201185 | 31 | 5 |
| 201185 | 41 | 28 |
| 201191 | 47 | 5 |
| 201252 | 53 | 7 |
| 201252 | 53 | 7 |
| 201295 | 39 | 6 |
| 201395 | 35 | 42 |
| 201439A | 19 | 10 |


www.oldgoodsewing.co.uk

# INDEX


| PART NO. | PAGE | NO. REF. | PART NO. | PAGE | NO. REF. | PART NO. | PAGE | NO. REF. | PART NO. | PAGE | NO. REF. | PART NO. | PAGE | NO. REF. |
|---|---|---|---|---|---|---|---|---|---|---|---|---|---|---|
| 201439A | 23 | 10 | 205469-JA | 49 | 15 | 210055 | 13 | 20 | 210188 | 39 | 2 | 210531 | 19 | 1 |
| 201635 | 15 | 32 | 205470-JA | 49 | 11 | 210056 | 13 | 16 | 210190 | 37 | 28 | 210532 | 25 | 55 |
| 202045 | 37 | 49 | 205473 | 49 | 3 | 210057 | 3 | 5 | 210190 | 39 | 39 | 210533 | 25 | 54 |
| 202045 | 39 | 63 | 205635 | 39 | 24 | 210057 | 13 | 17 | 210191 | 37 | 36 | 210534 | 25 | 52 |
| 202058 | 45 | 25 | 205685 | 9 | 28 | 210058 | 13 | 21 | 210191 | 39 | 49 | 210535 | 25 | 50 |
| 202174 | 15 | 17 | 205722A | 5 | 1 | 210062 | 13 | 7 | 210192 | 37 | 37 | 210539 | 41 | 26 |
| 202174 | 15 | 23 | 205722A | 9 | 26 | 210067 | 3 | 19 | 210192 | 39 | 50 | 210569-BF | 74 | |
| 202174 | 19 | 47 | 205763 | 39 | 29 | 210068 | 3 | 18 | 210193 | 37 | 35 | 210574-BF | 69 | |
| 202174 | 21 | 11 | 205764 | 49 | 7 | 210069 | 15 | 24 | 210193 | 39 | 48 | 210574-BF | 70 | |
| 202174 | 21 | 22 | 205765 | 49 | 8 | 210069 | 33 | 7 | 210194 | 37 | 38 | 210574-BF | 73 | |
| 202175 | 5 | 6 | 205897-91 | 41 | 6 | 210090 | 17 | 11 | 210194 | 39 | 51 | 210574-BF | 74 | |
| 202175 | 15 | 9 | 206128 | 27 | 39 | 210091 | 11 | 8 | 210198 | 37 | 26 | 210574-BF | 75 | |
| 202175 | 15 | 21 | 206129 | 27 | 49 | 210091 | 11 | 12 | 210198 | 39 | 37 | 210585 | 19 | 27 |
| 202175 | 19 | 41 | 206180 | 19 | 22 | 210091 | 11 | 23 | 210199 | 37 | 27 | 210585 | 23 | 27 |
| 202176 | 41 | 13 | 206180 | 33 | 8 | 210091 | 11 | 27 | 210199 | 39 | 38 | 210586 | 23 | 28 |
| 202176 | 41 | 25 | 206233 | 37 | 17 | 210092 | 19 | 23 | 210200 | 37 | 18 | 210679 | 5 | 27 |
| 202199 | 37 | 25 | 206233 | 39 | 13 | 210092 | 23 | 22 | 210200 | 39 | 14 | 210679 | 5 | 36 |
| 202199 | 39 | 20 | 206233 | 51 | 18 | 210093 | 19 | 26 | 210201-FD | 37 | 19 | 210680 | 47 | 2 |
| 202199 | 39 | 28 | 206336 | 49 | 6 | 210093 | 23 | 25 | 210201-FD | 39 | 15 | 210681 | 47 | 3 |
| 202199 | 39 | 35 | 206337 | 49 | 10 | 210099 | 19 | 17 | 210202 | 39 | 41 | 210682 | 47 | 7 |
| 202286 | 19 | 20 | 206337 | 49 | 17 | 210100 | 19 | 18 | 210204 | 39 | 44 | 210683 | 43 | 33 |
| 202286 | 19 | 25 | 206431 | 37 | 20 | 210100 | 27 | 10 | 210205 | 39 | 43 | 210683 | 47 | 9 |
| 202286 | 23 | 20 | 206431 | 39 | 16 | 210101 | 3 | 15 | 210206 | 39 | 22 | 210684 | 43 | 31 |
| 202286 | 23 | 24 | 206468 | 37 | 8 | 210102 | 3 | 16 | 210208 | 39 | 36 | 210684 | 47 | 10 |
| 202286 | 47 | 13 | 207341-JA | 45 | 14 | 210102 | 3 | 28 | 210211 | 37 | 42 | 210685 | 47 | 1 |
| 202287A | 37 | 44 | 207344-JA | 45 | 17 | 210103 | 19 | 29 | 210211 | 39 | 55 | 210686 | 47 | 14 |
| 202287A | 39 | 57 | 207345-JA | 45 | 26 | 210104 | 21 | 13 | 210212 | 37 | 47 | 210687 | 47 | 15 |
| 202295 | 33 | 25 | 207346 | 45 | 28 | 210105 | 21 | 9 | 210212 | 39 | 61 | 210700 | 25 | 43 |
| 202295 | 51 | 19 | 207350-JA | 45 | 20 | 210105 | 21 | 20 | 210213 | 41 | 16 | 210701 | 39 | 21 |
| 202295 | 68 | | 207924 | 35 | 7 | 210107 | 21 | 7 | 210214 | 41 | 17 | 210721 | 19 | 51 |
| 202295 | 69 | | 208009 | 9 | 35 | 210107 | 21 | 18 | 210215 | 41 | 21 | 210724 | 17 | 36 |
| 202295 | 70 | | 208168 | 27 | 45 | 210109 | 19 | 35 | 210223 | 9 | 24 | 210724 | 68 | |
| 202295 | 71 | | 208173 | 5 | 31 | 210110 | 3 | 17 | 210225 | 9 | 31 | 210724 | 69 | |
| 202295 | 72 | | 208173 | 19 | 39 | 210112A | 19 | 48 | 210228-PC | 11 | 17 | 210724 | 70 | |
| 202295 | 73 | | 208235 | 25 | 24 | 210113 | 19 | 49 | 210228-PD | 11 | 2 | 210724 | 71 | |
| 202295 | 74 | | 208235 | 27 | 40 | 210114 | 19 | 42 | 210229 | 11 | 4 | 210724 | 72 | |
| 202295 | 75 | | 208235 | 33 | 16 | 210115 | 19 | 44 | 210229 | 11 | 19 | 210724 | 73 | |
| 202340 | 33 | 28 | 208245 | 7 | 24 | 210117 | 7 | 33 | 210231 | 15 | 27 | 210724 | 74 | |
| 202451 | 35 | 24 | 208411 | 25 | 8 | 210118 | 19 | 40 | 210232 | 15 | 13 | 210724 | 75 | |
| 202476-1 | 41 | 7 | 208415 | 25 | 9 | 210122 | 23 | 21 | 210233 | 3 | 3 | 210724 | 68 | |
| 202476-3 | 41 | 9 | 208447 | 17 | 2 | 210123 | 23 | 17 | 210234 | 3 | 2 | 210725 | 23 | 29 |
| 202476-4 | 41 | 8 | 208447 | 19 | 2 | 210124 | 3 | 24 | 210235 | 15 | 8 | 210728 | 35 | 11 |
| 202577 | 15 | 20 | 208447 | 23 | 2 | 210125 | 3 | 25 | 210236 | 15 | 11 | 210731 | 11 | 14 |
| 202645 | 35 | 41 | 208448 | 17 | 3 | 210127 | 25 | 15 | 210237A | 15 | 15 | 210731 | 11 | 29 |
| 202647A | 35 | 46 | 208448 | 19 | 3 | 210128A | 25 | 20 | 210238 | 15 | 10 | 210734 | 11 | 25 |
| 202849 | 17 | 9 | 208448 | 23 | 3 | 210129 | 25 | 16 | 210239 | 15 | 1 | 210744 | 39 | 32 |
| 202849 | 19 | 9 | 208449 | 17 | 7 | 210130 | 25 | 17 | 210240 | 15 | 2 | 210750 | 17 | 25 |
| 202849 | 23 | 9 | 208449 | 19 | 7 | 210136 | 25 | 6 | 210241 | 15 | 4 | 210751 | 17 | 26 |
| 202875 | 7 | 7 | 208449 | 23 | 7 | 210137 | 25 | 1 | 210242 | 3 | 4 | 210756 | 33 | 35 |
| 202875 | 19 | 16 | 208450 | 17 | 5 | 210138 | 25 | 4 | 210264 | 17 | 12 | 210758 | 33 | 37 |
| 202875 | 23 | 14 | 208450 | 19 | 5 | 210139 | 25 | 2 | 210267 | 19 | 21 | 210759 | 33 | 38 |
| 204006 | 5 | 33 | 208450 | 23 | 5 | 210140 | 25 | 13 | 210297 | 3 | 21 | 210766 | 41 | 20 |
| 204010 | 13 | 5 | 208525-B | 35 | 48 | 210141A | 25 | 22 | 210314 | 33 | 9 | 210784 | 74 | |
| 204052A | 25 | 30 | 208537 | 35 | 38 | 210143 | 3 | 27 | 210319 | 17 | 6 | 210795 | 73 | |
| 204052A | 31 | 13 | 208579 | 33 | 2 | 210144 | 27 | 2 | 210319 | 19 | 6 | 210796 | 69 | |
| 204084 | 25 | 14 | 208592 | 19 | 46 | 210145 | 27 | 4 | 210319 | 23 | 6 | 210796 | 73 | |
| 204107 | 23 | 18 | 208599 | 35 | 43 | 210146 | 27 | 5 | 210323 | 35 | 20 | 210796 | 75 | |
| 204114 | 27 | 33 | 208687 | 39 | 5 | 210147 | 27 | 20 | 210328 | 29 | 2 | 210797 | 69 | |
| 204115 | 27 | 22 | 208744 | 9 | 29 | 210148 | 27 | 21 | 210335 | 35 | 4 | 210797 | 73 | |
| 204115 | 27 | 34 | 208747 | 9 | 27 | 210148 | 29 | 10 | 210343 | 27 | 24 | 210797 | 75 | |
| 204115 | 29 | 11 | 208774 | 35 | 40 | 210148 | 31 | 32 | 210349 | 19 | 12 | 210801 | 72 | |
| 204115 | 31 | 34 | 209287 | 45 | 19 | 210152 | 27 | 7 | 210350 | 19 | 14 | 210801 | 75 | |
| 204128A | 27 | 14 | 210002 | 5 | 4 | 210153 | 27 | 32 | 210353 | 23 | 36 | 210804 | 69 | |
| 204129A | 27 | 12 | 210003 | 5 | 32 | 210154 | 27 | 19 | 210365 | 68 | | 210804 | 70 | |
| 204146 | 15 | 30 | 210003 | 5 | 34 | 210155 | 27 | 31 | 210365 | 69 | | 210804 | 73 | |
| 204184 | 39 | 7 | 210005 | 5 | 24 | 210156 | 27 | 38 | 210365 | 70 | | 210804 | 74 | |
| 204185 | 25 | 3 | 210006 | 7 | 31 | 210157 | 27 | 41 | 210365 | 72 | | 210804 | 75 | |
| 204185 | 37 | 16 | 210007 | 7 | 29 | 210158 | 27 | 43 | 210365 | 73 | | 210805 | 69 | |
| 204185 | 39 | 12 | 210020 | 7 | 13 | 210159 | 27 | 48 | 210365 | 74 | | 210805 | 70 | |
| 204274 | 21 | 8 | 210021 | 7 | 21 | 210160 | 27 | 46 | 210366 | 68 | | 210805 | 73 | |
| 204274 | 21 | 19 | 210022 | 7 | 2 | 210161 | 25 | 25 | 210366 | 69 | | 210805 | 74 | |
| 204293 | 13 | 26 | 210022 | 7 | 27 | 210162 | 25 | 27 | 210366 | 73 | | 210805 | 75 | |
| 204319 | 13 | 3 | 210023 | 7 | 23 | 210163 | 25 | 29 | 210366 | 74 | | 210806 | 69 | |
| 204439A | 27 | 17 | 210024 | 7 | 5 | 210164 | 3 | 26 | 210371 | 75 | | 210806 | 70 | |
| 204466 | 41 | 19 | 210025 | 7 | 8 | 210166 | 25 | 35 | 210374 | 75 | | 210806 | 73 | |
| 204585 | 45 | 9 | 210025 | 7 | 12 | 210167 | 25 | 37 | 210445-BF | 75 | | 210806 | 74 | |
| 204657 | 19 | 11 | 210025 | 7 | 28 | 210167 | 31 | 6 | 210503 | 75 | | 210806 | 75 | |
| 204657 | 19 | 37 | 210026-FB | 7 | 18 | 210168 | 25 | 40 | 210510 | 37 | 39 | 210809 | 72 | |
| 204657 | 23 | 11 | 210027-FB | 7 | 9 | 210170 | 25 | 41 | 210510 | 39 | 52 | 210809 | 75 | |
| 204667 | 47 | 18 | 210028-FB | 9 | 9 | 210171 | 25 | 45 | 210511 | 15 | 25 | 210881 | 7 | 17 |
| 204737A | 13 | 1 | 210034-HD | 9 | 1 | 210171 | 31 | 3 | 210517 | 35 | 36 | 210883 | 7 | 1 |
| 204754A | 25 | 31 | 210035 | 9 | 4 | 210172 | 25 | 51 | 210520 | 37 | 50 | 210898 | 17 | 41 |
| 204756 | 25 | 33 | 210036 | 9 | 5 | 210173 | 11 | 6 | 210520 | 39 | 58 | 210922 | 17 | 39 |
| 204757 | 25 | 34 | 210037 | 9 | 7 | 210173 | 11 | 21 | 210521 | 37 | 45 | 210923 | 17 | 42 |
| 204888 | 43 | 23 | 210042 | 9 | 34 | 210175 | 33 | 11 | 210521 | 39 | 59 | 210928A91 | 21 | 12 |
| 205113A | 37 | 23 | 210043 | 9 | 38 | 210178A | 33 | 3 | 210523 | 49 | 4 | 210929A91 | 21 | 1 |
| 205418 | 27 | 16 | 210044 | 9 | 46 | 210179 | 33 | 21 | 210528 | 5 | 16 | 210930 | 17 | 38 |
| 205466A | 49 | 1 | 210045 | 9 | 44 | 210180 | 33 | 23 | 210529 | 17 | 1 | 210955 | 43 | 37 |
| 205467 | 49 | 9 | 210046 | 9 | 42 | 210183 | 33 | 29 | 210529 | 17 | 10 | 211264 | 47 | 41 |
| 205468-JA | 49 | 14 | 210047 | 9 | 39 | 210184 | 33 | 26 | 210530 | 23 | 1 | 211265 | 47 | 43 |

# INDEX


| PART NO. | PAGE | NO. REF. |
|---|---|---|
| 211300 | 7 | 4 |
| 211301 | 25 | 39 |
| 211301 | 31 | 8 |
| 211314 | 25 | 48 |
| 211315 | 41 | 2 |
| 211316 | 41 | 4 |
| 211317 | 41 | 10 |
| 211318 | 41 | 14 |
| 211319 | 41 | 15 |
| 211345AHD | 13 | 22 |
| 211358 | 17 | 20 |
| 211358 | 68 | |
| 211358 | 69 | |
| 211358 | 72 | |
| 211358 | 73 | |
| 211358 | 74 | |
| 211358 | 75 | |
| 211360 | 68 | |
| 211360 | 69 | |
| 211360 | 70 | |
| 211360 | 71 | |
| 211360 | 72 | |
| 211360 | 73 | |
| 211360 | 74 | |
| 211360 | 75 | |
| 211361 | 71 | |
| 211362 | 71 | |
| 211369 | 37 | 29 |
| 211369 | 39 | 40 |
| 211385 | 3 | 10 |
| 211389-HD | 5 | 9 |
| 211392 | 17 | 32 |
| 211401 | 23 | 37 |
| 211507 | 69 | |
| 211507 | 70 | |
| 211507 | 72 | |
| 211507 | 73 | |
| 211507 | 74 | |
| 211526 | 13 | 14 |
| 211527 | 13 | 10 |
| 211528 | 13 | 18 |
| 211529 | 13 | 15 |
| 211530 | 13 | 12 |
| 211531 | 37 | 3 |
| 211531 | 39 | 3 |
| 211533 | 3 | 14 |
| 211557 | 35 | 56 |
| 211636 | 35 | 1 |
| 211639 | 41 | 23 |
| 211649 | 15 | 29 |
| 211652 | 11 | 10 |
| 211654-T | 21 | 5 |
| 211654-T | 21 | 16 |
| 211655 | 21 | 2 |
| 211657 | 35 | 45 |
| 211698 | 9 | 50 |
| 211698A | 9 | 51 |
| 211698B | 9 | 52 |
| 211702 | 9 | 32 |
| 211719 | 68 | |
| 211719 | 69 | |
| 211719 | 70 | |
| 211719 | 72 | |
| 211719 | 73 | |
| 211719 | 74 | |
| 211719 | 75 | |
| 211720 | 71 | |
| 211771 | 33 | 32 |
| 211771 | 71 | |
| 211794 | 9 | 33 |
| 211802A | 25 | 10 |
| 211804 | 25 | 11 |
| 211823 | 35 | 19 |
| 211840 | 9 | 48 |
| 211844 | 69 | |
| 211844 | 70 | |
| 211844 | 71 | |
| 211844 | 72 | |
| 211844 | 73 | |
| 211844 | 74 | |
| 211844 | 75 | |
| 211874-TA | 75 | |
| 211875-TA | 75 | |
| 211879 | 47 | 23 |
| 211880 | 43 | 46 |
| 211880 | 47 | 24 |
| 211926-T | 21 | 4 |
| 211926-T | 21 | 15 |
| 211929-BF | 75 | |
| 211941 | 35 | 39 |

| PART NO. | PAGE | NO. REF. |
|---|---|---|
| 211946 | 43 | 47 |
| 211946 | 47 | 25 |
| 211949 | 47 | 28 |
| 211958 | 9 | 22 |
| 211959-FD | 9 | 20 |
| 211968-BF | 70 | |
| 211995 | 19 | 33 |
| 212001-FD | 3 | 1 |
| 212004AFD | 5 | 8 |
| 212005 | 9 | 15 |
| 212006 | 9 | 13 |
| 212007 | 5 | 17 |
| 212008 | 5 | 20 |
| 212009 | 9 | 11 |
| 212010-FD | 5 | 21 |
| 212011 | 5 | 22 |
| 212015 | 29 | 24 |
| 212019 | 29 | 19 |
| 212020 | 29 | 21 |
| 212021 | 29 | 6 |
| 212025 | 29 | 3 |
| 212026 | 29 | 5 |
| 212028 | 27 | 1 |
| 212035 | 31 | 26 |
| 212036 | 29 | 9 |
| 212037 | 3 | 22 |
| 212038 | 3 | 23 |
| 212039 | 31 | 29 |
| 212042 | 31 | 10 |
| 212047 | 35 | 17 |
| 212048 | 3 | 7 |
| 212049 | 35 | 18 |
| 212050 | 35 | 5 |
| 212052 | 35 | 13 |
| 212068 | 75 | |
| 212069 | 35 | 50 |
| 212070-BF | 75 | |
| 212133 | 75 | |
| 212140 | 29 | 33 |
| 212143 | 29 | 34 |
| 212144 | 29 | 8 |
| 212145 | 29 | 7 |
| 212146 | 29 | 35 |
| 212147 | 29 | 36 |
| 212148 | 39 | 1 |
| 212149 | 39 | 9 |
| 212152 | 37 | 32 |
| 212152 | 39 | 45 |
| 212153 | 37 | 33 |
| 212153 | 39 | 46 |
| 212154 | 3 | 20 |
| 212179 | 25 | 57 |
| 212181-BF | 75 | |
| 212186 | 15 | 5 |
| 212188 | 37 | 30 |
| 212188 | 39 | 42 |
| 212215 | 68 | |
| 212215 | 69 | |
| 212215 | 70 | |
| 212215 | 71 | |
| 212215 | 72 | |
| 212215 | 73 | |
| 212215 | 74 | |
| 212215 | 75 | |
| 212215A | 71 | |
| 212279A | 5 | 35 |
| 212287 | 47 | 21 |
| 212325-FD | 3 | 12 |
| 212400 | 29 | 13 |
| 212404 | 29 | 23 |
| 212405 | 29 | 26 |
| 212408 | 33 | 13 |
| 212409 | 33 | 17 |
| 212410 | 33 | 19 |
| 212412A | 15 | 14 |
| 212413 | 15 | 19 |
| 212416 | 31 | 1 |
| 212419 | 31 | 11 |
| 212420 | 35 | 22 |
| 212430 | 43 | 14 |
| 212431 | 43 | 18 |
| 212432 | 43 | 17 |
| 212433 | 43 | 3 |
| 212434 | 43 | 11 |
| 212435 | 43 | 10 |
| 212436 | 43 | 7 |
| 212436 | 45 | 10 |
| 212437 | 43 | 5 |
| 212438 | 35 | 26 |
| 212439 | 35 | 28 |

| PART NO. | PAGE | NO. REF. |
|---|---|---|
| 212440 | 29 | 1 |
| 212441 | 49 | 18 |
| 212442 | 49 | 19 |
| 212443 | 49 | 22 |
| 212444 | 49 | 26 |
| 212445 | 29 | 30 |
| 212446 | 29 | 31 |
| 212447 | 29 | 27 |
| 212448 | 29 | 14 |
| 212449 | 29 | 15 |
| 212477 | 43 | 8 |
| 212478 | 45 | 1 |
| 212479 | 45 | 2 |
| 212480 | 45 | 3 |
| 212481 | 45 | 4 |
| 212482 | 45 | 5 |
| 212483 | 45 | 7 |
| 212484 | 45 | 11 |
| 212485 | 45 | 16 |
| 212486 | 45 | 22 |
| 212487 | 45 | 13 |
| 212489AFD | 5 | 7 |
| 212492 | 45 | 29 |
| 212493-JA | 45 | 30 |
| 212502 | 23 | 35 |
| 212503 | 17 | 28 |
| 212504 | 17 | 27 |
| 212572-BF | 69 | |
| 212572-BF | 70 | |
| 212572-BF | 73 | |
| 212572-BF | 74 | |
| 212600 | 43 | 13 |
| 212601 | 43 | 21 |
| 212602 | 43 | 29 |
| 212603 | 43 | 34 |
| 212604 | 43 | 25 |
| 212606 | 43 | 27 |
| 212607 | 43 | 28 |
| 212609-91 | 9 | 17 |
| 212634 | 37 | 41 |
| 212634 | 39 | 54 |
| 212635-ME | 41 | 1 |
| 212644 | 68 | |
| 212644 | 69 | |
| 212644 | 70 | |
| 212644 | 72 | |
| 212644 | 73 | |
| 212644 | 74 | |
| 212646 | 31 | 21 |
| 212650 | 31 | 31 |
| 212651 | 31 | 18 |
| 212652 | 31 | 15 |
| 212653 | 31 | 24 |
| 212655 | 43 | 1 |
| 212655A91 | 43 | 2 |
| 212657B | 11 | 16 |
| 212658 | 43 | 40 |
| 212658A | 43 | 45 |
| 212659 | 43 | 35 |
| 212660 | 43 | 38 |
| 212668 | 35 | 58 |
| 212669A | 35 | 32 |
| 212670B | 11 | 1 |
| 212673-30 | 68 | |
| 212673-30 | 69 | |
| 212673-40 | 68 | |
| 212673-40 | 69 | |
| 212673-50 | 69 | |
| 212673A30 | 70 | |
| 212673A40 | 70 | |
| 212673A50 | 70 | |
| 212673B30 | 71 | |
| 212673B40 | 71 | |
| 212673B50 | 71 | |
| 212677-10F | 68 | |
| 212677-10F | 69 | |
| 212677-10F | 70 | |
| 212677-10F | 72 | |
| 212677A10F | 71 | |
| 212704-13F | 74 | |
| 212705 | 35 | 47 |
| 212719A | 35 | 35 |
| 212721 | 17 | 16 |
| 212722 | 17 | 44 |
| 212722A | 17 | 18 |
| 212723 | 17 | 43 |
| 212723A | 17 | 14 |
| 212726 | 23 | 33 |
| 212727 | 23 | 15 |
| 212728 | 19 | 30 |

| PART NO. | PAGE | NO. REF. |
|---|---|---|
| 212730-30 | 71 | |
| 212730-40 | 71 | |
| 212730-50 | 71 | |
| 212731-25 | 71 | |
| 212731-35 | 71 | |
| 212731-45 | 71 | |
| 212736-50 | 72 | |
| 212738-40 | 72 | |
| 212740-13F | 72 | |
| 212757-40 | 69 | |
| 212757-50 | 69 | |
| 212759-16F | 72 | |
| 212759-16F | 75 | |
| 212760-13F | 68 | |
| 212760-13F | 70 | |
| 212761-40 | 74 | |
| 212763-10F | 74 | |
| 212764-30 | 73 | |
| 212764-40 | 73 | |
| 212764-50 | 73 | |
| 212766-30 | 73 | |
| 212766-30 | 74 | |
| 212766-40 | 73 | |
| 212766-40 | 74 | |
| 212766-50 | 73 | |
| 212766-50 | 74 | |
| 212766A30 | 74 | |
| 212766A40 | 74 | |
| 212766A50 | 74 | |
| 212768-10F | 73 | |
| 212768-10F | 74 | |
| 212774-40 | 71 | |
| 212774-50 | 71 | |
| 212778B25 | 71 | |
| 212778B35 | 71 | |
| 212778B45 | 71 | |
| 212781 | 69 | |
| 212781 | 70 | |
| 212781 | 71 | |
| 212781 | 72 | |
| 212781 | 73 | |
| 212781 | 74 | |
| 212781 | 75 | |
| 212785 | 15 | 34 |
| 212786-91 | 15 | 35 |
| 212821-FD | 3 | 13 |
| 212938 | 43 | 42 |
| 212939 | 43 | 43 |
| 212972A91 | 37 | 1 |
| 212976 | 37 | 2 |
| 212978-91 | 37 | 5 |
| 212979 | 37 | 6 |
| 212980 | 37 | 7 |
| 212981 | 37 | 9 |
| 212983-91 | 37 | 10 |
| 212985 | 5 | 11 |
| 212987 | 13 | 11 |
| 212991-30 | 70 | |
| 212991-40 | 70 | |
| 212998 | 37 | 31 |
| 213222A | 33 | 1 |
| 213513 | 68 | |
| 213514-30 | 68 | |
| 213514-40 | 68 | |
| 213514-50 | 68 | |
| 213542-30 | 68 | |
| 213542-40 | 68 | |
| 213548-40 | 68 | |
| 213548-50 | 68 | |
| 213550-13F | 71 | |
| 213567-16F | 71 | |
| 213570-10F | 68 | |
| 213571-16F | 68 | |
| 213572-16F | 68 | |
| 213573-16F | 68 | |
| 213574-13F | 68 | |
| 213575-13F | 68 | |
| 213576-30 | 68 | |
| 213576-40 | 68 | |
| 213576-50 | 68 | |
| 213578A | 37 | 11 |
| 213579 | 37 | 12 |
| 230047 | 5 | 26 |
| 240052 | 5 | 5 |
| 240097 | 41 | 3 |
| 240102 | 13 | 6 |
| 240148 | 15 | 18 |
| 240172 | 35 | 10 |
| 252531 | 31 | 20 |
| 300248 | 33 | 34 |

| PART NO. | PAGE | NO. REF. |
|---|---|---|
| 301373 | 68 | |
| 303067 | 49 | 24 |
| 303487 | 37 | 34 |
| 303487 | 39 | 47 |
| 307003 | 29 | 29 |
| 307003 | 31 | 17 |
| 307003 | 31 | 23 |
| 307003 | 31 | 28 |
| 307003 | 33 | 15 |
| 307003 | 35 | 15 |
| 629 MAUSER | 68 | |
| 9A3001 | 5 | 2 |
| 9A3002 | 37 | 51 |


www.collectsewing.co.uk

www.college-sewing.co.uk

www.college-sewing.co.uk

www.college-sewing.co.uk

PEGASUS
SEWING MACHINE MFG.
CO., LTD.®

www.collegesewing.co.uk

© 1989 PEGASUS SEWING MACHINE MFG. CO., LTD.

(198963.5H355P)